Chapter

3

The Geostationary Orbit

3.1. Introduction

A satellite in a geostationary orbit appears to be stationary with respect to the earth, hence the name *geostationary.* Three conditions are required for an orbit to be geostationary:

1. The satellite must travel eastward at the same rotational speed as the earth.
2. The orbit must be circular.
3. The inclination of the orbit must be zero.

The first condition is obvious. If the satellite is to appear stationary, it must rotate at the same speed as the earth, which is constant. The second condition follows from this and from Kepler's second law (Sec. 2.3). Constant speed means that equal areas must be swept out in equal times, and this can only occur with a circular orbit (see Fig. 2.2). The third condition, that the inclination must be zero, follows from the fact that any inclination would have the satellite moving north and south, (see Sec. 2.5 and Fig. 2.3), and hence it would not be geostationary. Movement north and south can be avoided only with zero inclination, which means that the orbit lies in the earth's equatorial plane.

Kepler's third law may be used to find the radius of the orbit (for a circular orbit, the semimajor axis is equal to the radius). Denoting the radius by a_{GSO}, then from Eqs. (2.2) and (2.4),

$$a_{GSO} = \left(\frac{\mu P^2}{4\pi^2}\right)^{\frac{1}{3}} \tag{3.1}$$

The period P for the geostationary is 23 h, 56 min, 4 s mean solar time (ordinary clock time). This is the time taken for the earth to complete one revolution about its N-S axis, measured relative to the fixed stars (see sidereal time, Sec. 2.9.4). Substituting this value along with the value for μ given by Eq. (2.3) results in

$$a_{GSO} = 42164 \text{ km} \tag{3.2}$$

The equatorial radius of the earth, to the nearest kilometer, is

$$a_E = 6378 \text{ km} \tag{3.3}$$

and hence the geostationary height is

$$\begin{aligned} h_{GSO} &= a_{GSO} - a_E \\ &= 42{,}164 - 6378 \\ &= 35{,}786 \text{ km} \end{aligned} \tag{3.4}$$

This value is often rounded up to 36,000 km for approximate calculations. In practice, a precise geostationary orbit cannot be attained because of disturbance forces in space and the effects of the earth's equatorial bulge. The gravitational fields of the sun and the moon produce a shift of about 0.85°/year in inclination. Also, the earth's *equatorial ellipticity* causes the satellite to drift eastward along the orbit. In practice, station-keeping maneuvers have to be performed periodically to correct for these shifts, as described in Sec. 7.4.

An important point to grasp is that there is only one geostationary orbit because there is only one value of a that satisfies Eq. (2.3) for a periodic time of 23 h, 56 min, 4 s. Communications authorities throughout the world regard the geostationary orbit as a natural resource, and its use is carefully regulated through national and international agreements.

3.2 Antenna Look Angles

The *look angles* for the ground station antenna are the azimuth and elevation angles required at the antenna so that it points directly at the satellite. In Sec. 2.9.8 the look angles were determined in the general case of an elliptical orbit, and there the angles had to change in order to track the satellite. With the geostationary orbit, the situation is much simpler because the satellite is stationary with respect to the earth. Although in general no tracking should be necessary, with the large earth stations used for commercial communications, the antenna beamwidth is very narrow (see Chap. 6), and a tracking mechanism

is required to compensate for the movement of the satellite about the nominal geostationary position. With the types of antennas used for home reception, the antenna beamwidth is quite broad, and no tracking is necessary. This allows the antenna to be fixed in position, as evidenced by the small antennas used for reception of satellite TV that can be seen fixed to the sides of homes.

The three pieces of information that are needed to determine the look angles for the geostationary orbit are

1. The earth station latitude, denoted here by λ_E
2. The earth station longitude, denoted here by ϕ_E
3. The longitude of the subsatellite point, denoted here by ϕ_{SS} (often this is just referred to as the satellite longitude)

As in Chap. 2, latitudes north will be taken as positive angles, and latitudes south, as negative angles. Longitudes east of the Greenwich meridian will be taken as positive angles, and longitudes west, as negative angles. For example, if a latitude of 40°S is specified, this will be taken as −40°, and if a longitude of 35°W is specified, this will be taken as −35°.

In Chap. 2, when calculating the look angles for lower-earth-orbit (LEO) satellites, it was necessary to take into account the variation in earth's radius. With the geostationary orbit, this variation has negligible effect on the look angles, and the average radius of the earth will be used. Denoting this by *R:*

$$R = 6371 \text{ km} \tag{3.5}$$

The geometry involving these quantities is shown in Fig. 3.1. Here, ES denotes the position of the earth station, SS the subsatellite point, S the satellite, and d is the range from the earth station to the satellite. The angle σ is an angle to be determined.

There are two types of triangles involved in the geometry of Fig. 3.1, the spherical triangle shown in heavy outline in Fig. 3.2*a* and the plane triangle of Fig. 3.2*b*. Considering first the spherical triangle, the sides are all arcs of great circles, and these sides are defined by the angles subtended by them at the center of the earth. Side a is the angle between the radius to the north pole and the radius to the subsatellite point, and it is seen that $a = 90°$. A spherical triangle in which one side is 90° is called a *quadrantal triangle*. Angle b is the angle between the radius to the earth station and the radius to the subsatellite point. Angle c is the angle between the radius to the earth station and the radius to the north pole. From Fig. 3.2*a* it is seen that $c = 90° - \lambda_E$.

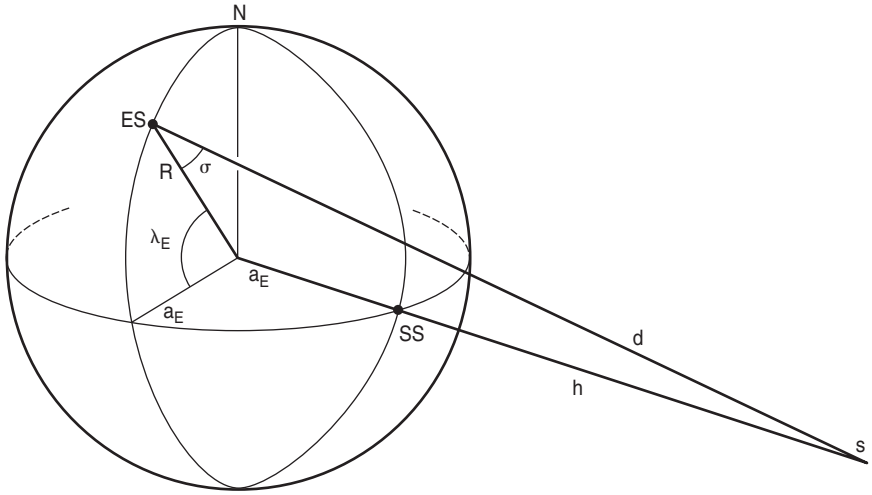

Figure 3.1 The geometry used in determining the look angles for a geostationary satellite.

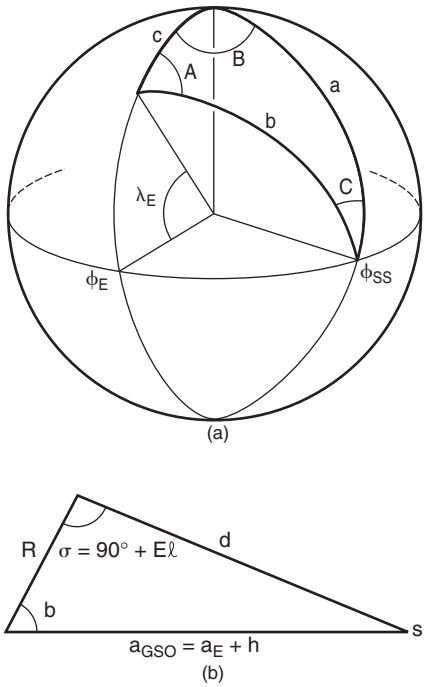

Figure 3.2 (*a*) The spherical geometry related to Fig. 3.1. (*b*) The plane triangle obtained from Fig. 3.1.

There are six angles in all defining the spherical triangle. The three angles A, B, and C are the angles between the planes. Angle A is the angle between the plane containing c and the plane containing b. Angle B is the angle between the plane containing c and the plane containing a. From Fig. 3.2*a*, $B = \phi_E - \phi_{SS}$. It will be shown shortly that the maximum value of B is 81.3°. Angle C is the angle between the plane containing b and the plane containing a.

To summarize to this point, the information known about the spherical triangle is

$$a = 90° \tag{3.6}$$

$$c = 90° - \lambda_E \tag{3.7}$$

$$B = \phi_E - \phi_{SS} \tag{3.8}$$

Note that when the earth station is west of the subsatellite point, B is negative, and when east, B is positive. When the earth station latitude is north, c is less than 90°, and when south, c is greater than 90°. Special rules, known as *Napier's rules,* are used to solve the spherical triangle (see, for example, Wertz, 1984), and these have been modified here to take into account the signed angles B and λ_E. Only the result will be stated here. Napier's rules gives angle b as

$$b = \arccos(\cos B \cos \lambda_E) \tag{3.9}$$

and angle A as

$$A = \arcsin\left(\frac{\sin|B|}{\sin b}\right) \tag{3.10}$$

Two values will satisfy Eq. (3.10), A and $180° - A$, and these must be determined by inspection. These are shown in Fig. 3.3. In Fig. 3.3*a*, angle A is acute (less than 90°), and the azimuth angle is $A_z = A$. In Fig. 3.3*b*, angle A is acute, and the azimuth is, by inspection, $A_z = 360° - A$. In Fig. 3.3*c*, angle A_c is obtuse and is given by $A_c = 180° - A$, where A is the acute value obtained from Eq. (3.10). Again, by inspection, $A_z = A_c = 180° - A$. In Fig. 3.3*d*, angle A_d is obtuse and is given by $180° - A$, where A is the acute value obtained from Eq. (3.9). By inspection, $A_z = 360° - A_d = 180° + A$. In all cases, A is the acute angle returned by Eq. (3.9). These conditions are summarized in Table 3.1.

Example 3.1 A geostationary satellite is located at 90°W. Calculate the azimuth angle for an earth station antenna at latitude 35°N and longitude 100°W.

solution The given quantities are

$$\phi_{SS} := -90 \cdot \text{deg} \qquad \phi_E := -100 \cdot \text{deg} \qquad \lambda_E := 35 \cdot \text{deg}$$

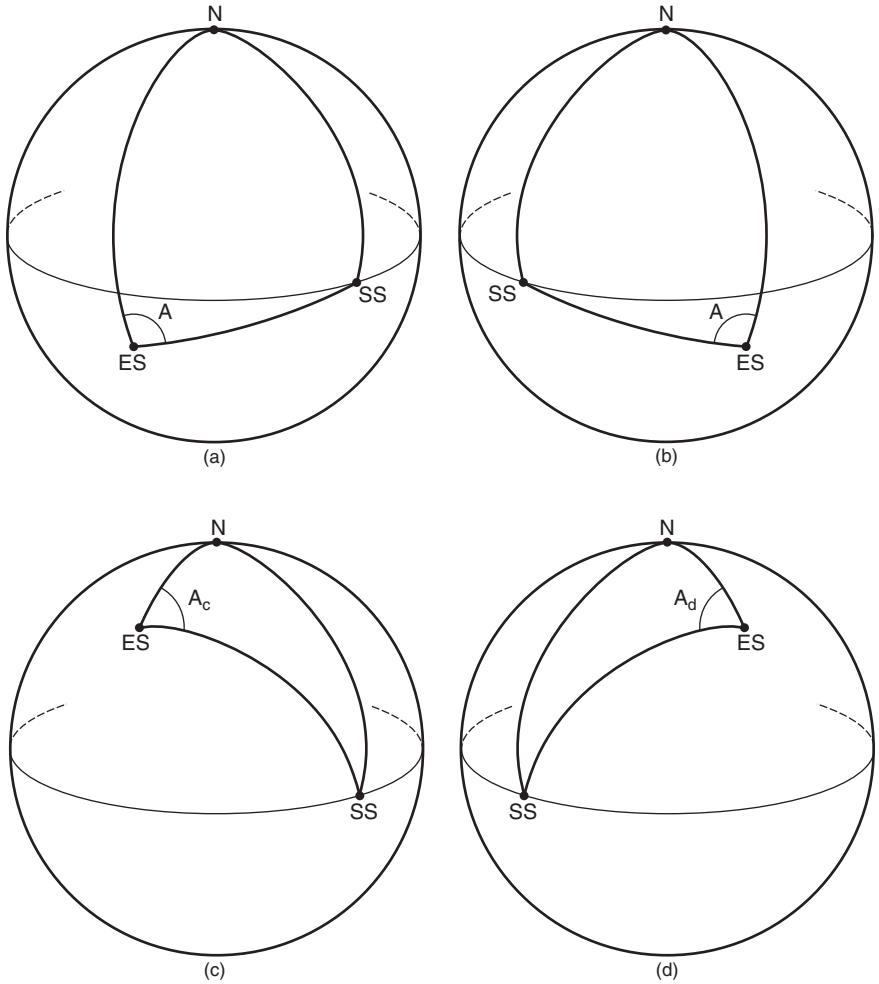

Figure 3.3 Azimuth angles related to angle A (see Table 3.1).

TABLE 3.1 Azimuth Angles A_z from Fig. 3.3

Fig. 3.3	λ_E	B	A_z, degrees
a	<0	<0	A
b	<0	>0	$360° - A$
c	>0	<0	$180° - A$
d	>0	>0	$180° + A$

Equation (3.7):

$$B := \phi_E - \phi_{SS} \qquad B = -10 \cdot deg$$

Equation (3.8):

$$b := acos(cos(B) \cdot cos(\lambda_E)) \qquad b = 36.2 \cdot deg$$

Equation (3.9):

$$A := asin\left(\frac{sin(|B|)}{sin(b)}\right) \qquad A = 17.1 \cdot deg$$

By inspection, $\lambda_E > 0$ and $B < 0$. Therefore, Fig. 3.3*c* applies, and

$$A_z := 180 \cdot deg - A \qquad A_z = 162.9 \cdot deg$$

$$= = = = = = = =$$

Applying the cosine rule for plane triangles to the triangle of Fig. 3.2*b* allows the range *d* to be found to a close approximation:

$$d = \sqrt{R^2 + a_{GSO}{}^2 - 2Ra_{GSO}\cos b} \tag{3.11}$$

Applying the sine rule for plane triangles to the triangle of Fig. 3.2*b* allows the angle of elevation to be found:

$$El = \arccos\left(\frac{a_{GSO}}{d}\sin b\right) \tag{3.12}$$

Example 3.2 Find the range and antenna elevation angle for the situation specified in Example 3.1.

solution

$$R := 6371 \cdot km \qquad a_{GSO} := 42164 \cdot km$$

From Example 3.1:

$$b := 36.2 \cdot deg$$

Equation (3.11):

$$d := \sqrt{R^2 + a_{GSO}{}^2 - 2 \cdot R \cdot a_{GSO} \cdot cos(b)} \qquad d = 37{,}215\ km$$

$$= = = = = = = =$$

Equation (3.12):

$$El := acos\left(\frac{a_{GSO}}{d} \cdot sin(b)\right) \qquad El = 48 \cdot deg$$

$$= = = = = = = =$$

Figure 3.4 shows the look angles for Ku-band satellites as seen from Thunder Bay, Ontario, Canada.

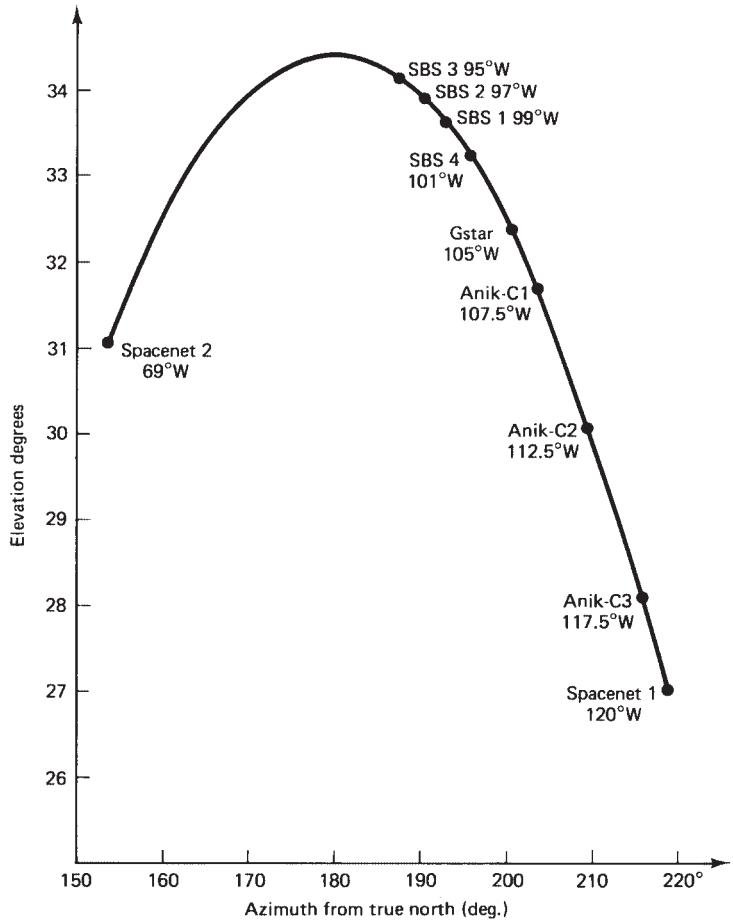

Figure 3.4 Azmuth-elevation angles for an earth station location of 48.42°N, 89.26°W (Thunder Bay, Ontario). Ku-band satellites are shown.

The preceding results do not take into account the case when the earth station is on the equator. Obviously, when the earth station is directly under the satellite, the elevation is 90°, and the azimuth is irrelevant. When the subsatellite point is east of the equatorial earth station ($B < 0$), the azimuth is 90°, and when west ($B > 0$), the azimuth is 270°. Also, the range as determined by Eq. (3.11) is approximate, and where more accurate values are required, as, for example, where propagation times need to be known accurately, the range is determined by measurement.

For a typical home installation, practical adjustments will be made to align the antenna to a known satellite for maximum signal. Thus

the look angles need not be determined with great precision but are calculated to give the expected values for a satellite whose longitude is close to the earth station longitude. In some cases, especially with direct broadcast satellites (DBS), the home antenna is aligned to one particular cluster of satellites, as described in Chap. 16, and no further adjustments are necessary.

3.3 The Polar Mount Antenna

Where the home antenna has to be steerable, expense usually precludes the use of separate azimuth and elevation actuators. Instead, a single actuator is used which moves the antenna in a circular arc. This is known as a *polar mount antenna.* The antenna pointing can only be accurate for one satellite, and some pointing error must be accepted for satellites on either side of this. With the polar mount antenna, the dish is mounted on an axis termed the *polar axis* such that the antenna boresight is normal to this axis, as shown in Fig. 3.5*a.* The polar mount is aligned along a true north line, as shown in Fig. 3.5, with the boresight pointing due south. The angle between the polar mount and the local horizontal plane is set equal to the earth station latitude λ_E; simple geometry shows that this makes the boresight lie parallel to the equatorial plane. Next, the dish is tilted at an angle δ relative to the polar mount until the boresight is pointing at a satellite position due south of the earth station. Note that there does not need to be an actual satellite at this position. (The angle of tilt is often referred to as the *declination,* which must not be confused with the magnetic declination used in correcting compass readings. The term *angle of tilt* will be used for δ in this text.)

The required angle of tilt is found as follows: From the geometry of Fig. 3.5*b,*

$$\delta = 90^\circ - El_0 - \lambda_E \tag{3.13}$$

where El_0 is the angle of elevation required for the satellite position due south of the earth station. But for the due south situation, angle B in Eq. (3.8) is equal to zero; hence, from Eq. (3.9), $b = \lambda_E$. Hence, from Eq. (3.12), or Fig 3.5*c.*

$$\cos El_0 = \frac{a_{GSO}}{d} \sin \lambda_E \tag{3.14}$$

Combining Eqs. (3.13) and (3.14) gives the required angle of tilt as

$$\delta = 90^\circ - \arccos\left(\frac{a_{GSO}}{d} \sin \lambda_E\right) - \lambda_E \tag{3.15}$$

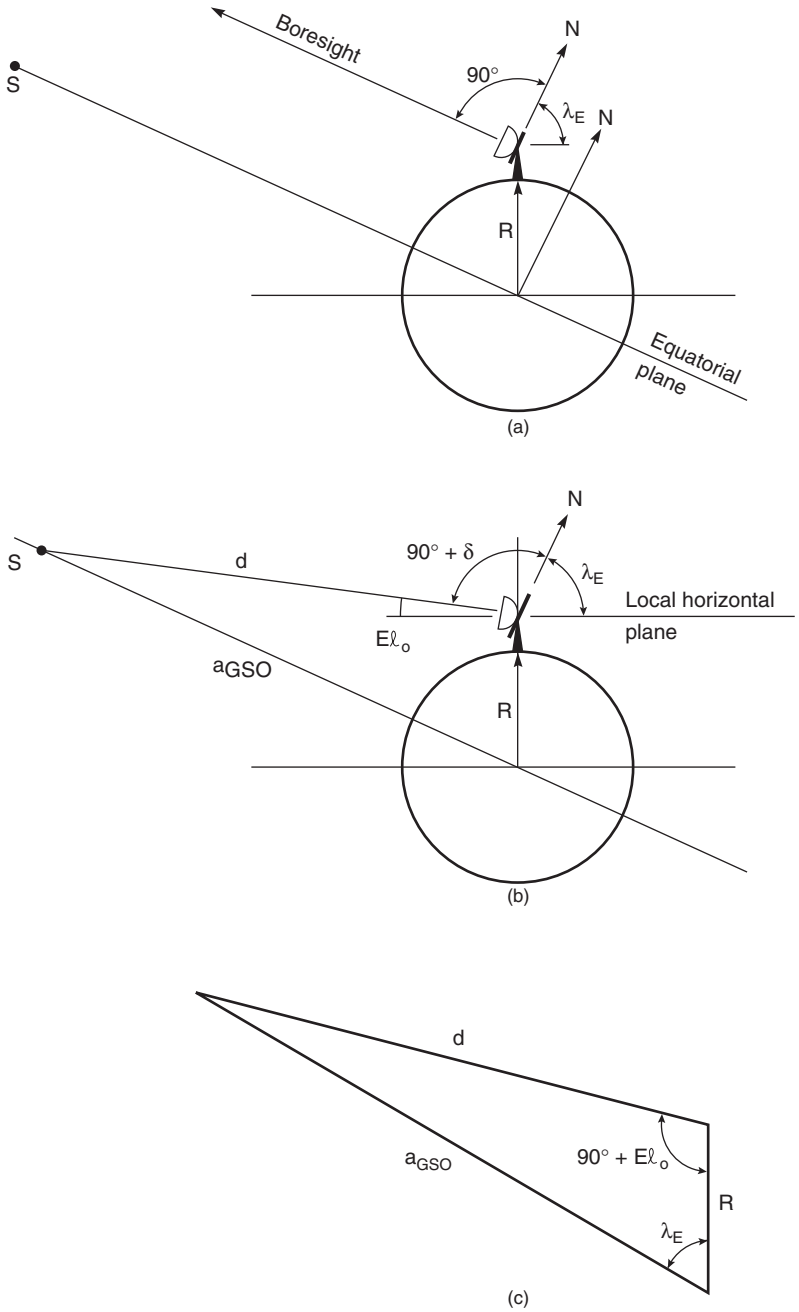

Figure 3.5 The polar mount antenna.

In the calculations leading to *d,* a spherical earth of mean radius 6371 km may be assumed and earth station elevation may be ignored, as was done in the previous section. The value obtained for δ will be sufficiently accurate for initial alignment and fine adjustments can be made if necessary. Calculation of the angle of tilt is illustrated in Example 3.3.

Example 3.3 Determine the angle of tilt required for a polar mount used with an earth station at latitude 49 degrees north. Assume a spherical earth of mean radius 6371 km, and ignore earth station altitude.

solution Given data

$$\lambda_E := 49 \cdot \text{deg} \qquad a_{GSO} := 42164 \cdot \text{km} \qquad R := 6371 \cdot \text{km}$$

$$d := \sqrt{R^2 + a_{GSO}{}^2 - 2 \cdot R \cdot a_{GSO} \cdot \cos(\lambda_E)} \qquad \text{...Eq. (3.11) with } b = \lambda_E$$

$$El_0 := \text{acos}\left(\frac{a_{GSO}}{d} \cdot \sin(\lambda_E)\right) \qquad \text{...Eq. (3.12)}$$

$$\delta := 90 \cdot \text{deg} - El_0 - \lambda_E \qquad \delta = 7 \cdot \text{deg}$$

= = = = =

3.4 Limits of Visibility

There will be east and west limits on the geostationary arc visible from any given earth station. The limits will be set by the geographic coordinates of the earth station and the antenna elevation. The lowest elevation in theory is zero, when the antenna is pointing along the horizontal. A quick estimate of the longitudinal limits can be made by considering an earth station at the equator, with the antenna pointing either west or east along the horizontal, as shown in Fig. 3.6. The limiting angle is given by

$$\begin{aligned} \theta &= \arccos \frac{a_E}{a_{GSO}} \\ &= \arccos \frac{6378}{42{,}164} \\ &= 81.3^\circ \end{aligned} \tag{3.16}$$

Thus, for this situation, an earth station could see satellites over a geostationary arc bounded by ±81.3° about the earth station longitude.

In practice, to avoid reception of excessive noise from the earth, some finite minimum value of elevation is used, which will be denoted

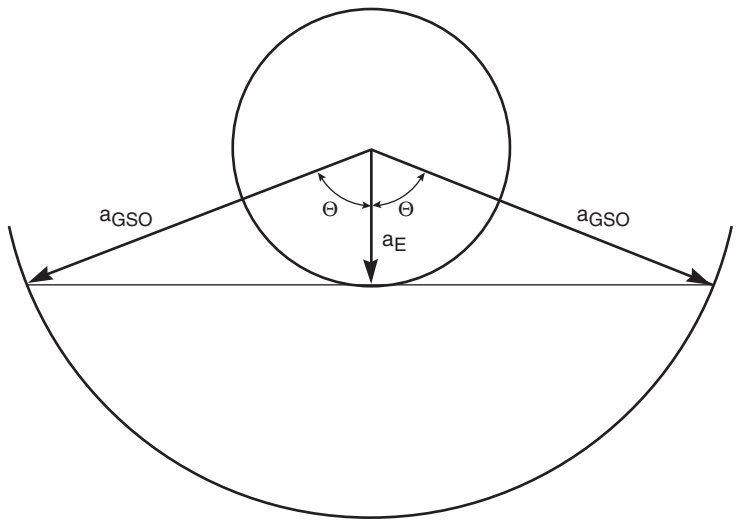

Figure 3.6 Illustrating the limits of visibility.

here by $El_{\min}$. A typical value is 5°. The limits of visibility will also depend on the earth station latitude. As in Fig. 3.2*b,* let S represent the angle subtended at the satellite when the angle $\sigma_{\min} = 90° + El_{\min}$. Applying the sine rule gives

$$S = \arcsin\left(\frac{R}{a_{\text{GSO}}} \sin \sigma_{\min}\right) \tag{3.17}$$

A sufficiently accurate estimate is obtained by assuming a spherical earth of mean radius 6371 km as was done previously. Once angle S is known, angle b is found from

$$b = 180 - \sigma_{\min} - S \tag{3.18}$$

From Eq. (3.9),

$$B = \arccos\left(\frac{\cos b}{\cos \lambda_E}\right) \tag{3.19}$$

Once angle B is found, the satellite longitude can be determined from Eq. (3.8). This is illustrated in Example 3.4.

Example 3.4 Determine the limits of visibility for an earth station situated at mean sea level, at latitude 48.42 degrees north, and longitude 89.26 degrees west. Assume a minimum angle of elevation of 5 degrees.

solution Given data:

$$\lambda_E := 48.42 \cdot \text{deg} \qquad \phi_E := -89.26 \cdot \text{deg} \qquad El_{min} := 5 \cdot \text{deg}$$

$$a_{GSO} := 42164 \cdot \text{km}$$

$$R := 6371 \cdot \text{km}$$

$$\sigma_{min} := 90 \cdot \text{deg} + El_{min}$$

$$S := \text{asin}\left(\frac{R}{a_{GSO}} \cdot \sin(\sigma_{min})\right) \qquad S = 8.66^\circ \qquad \text{...Eq. (3.17)}$$

$$b := 180 \cdot \text{deg} - \sigma_{min} - S \qquad b = 76.34^\circ \qquad \text{...Eq. (3.18)}$$

$$B := \text{acos}\left(\frac{\cos(b)}{\cos(\lambda_E)}\right) \qquad \beta = 69.15^\circ \qquad \text{...Eq. (3.19)}$$

The satellite limit east of the earth station is at

$$\phi_E + B = -20 \cdot \text{deg approx.}$$

and west of the earth station at

$$\phi_E - B = -158 \cdot \text{deg approx.}$$

= = = = = = = = =

3.5 Near Geostationary Orbits

As mentioned in Sec. 2.8, there are a number of perturbing forces that cause an orbit to depart from the ideal keplerian orbit. For the geostationary case, the most important of these are the gravitational fields of the moon and the sun and the nonspherical shape of the earth. Other significant forces are solar radiation pressure and reaction of the satellite itself to motor movement within the satellite. As a result, station keeping maneuvers must be carried out to maintain the satellite within set limits of its nominal geostationary position. Station keeping is discussed in Sec. 7.4.

An exact geostationary orbit therefore is not attainable in practice, and the orbital parameters vary with time. The two-line orbital elements are published at regular intervals, Fig. 3.7 showing typical values. The period for a geostationary satellite is 23 h, 56 min, 4 s, or 86,164 s. The reciprocal of this is 1.00273896 rev/day, which is about the value tabulated for most of the satellites in Fig. 3.7. Thus these satellites are *geosynchronous,* in that they rotate in synchronism with the rotation of the earth. However, they are not geostationary. The term *geosynchronous satellite* is used in many cases instead of *geostationary* to describe these near-geostationary satellites. It should be

noted, however, that in general a geosynchronous satellite does not have to be near-geostationary, and there are a number of geosynchronous satellites that are in highly elliptical orbits with comparatively large inclinations (e.g., the Tundra satellites).

Although in principle the two-line elements could be used as described in Chap. 2 to determine orbital motion, the small inclination makes it difficult to locate the position of the ascending node, and the small eccentricity makes it difficult to locate the position of the perigee. However, because of the small inclination, the angles ω and Ω are almost in the same plane, and this approximation is used. Thus the mean longitude of the satellite is given by

$$\phi_{SSmean} = \omega + \Omega + M - GST \tag{3.20}$$

$$\phi_{SS} = \omega + \Omega + v - GST \tag{3.21}$$

Equation (2.31) can be used to calculate the true anomaly, and because of the small eccentricity, this can be approximated as

$$v = M + 2e \sin(M) \tag{3.22}$$

```
COMSTAR 2
1 09047U 76073A 00223.54804866 .00000046 00000-0 10000-3 0 6105
2 09047 12.0422 29.2398 0003118 249.8535 110.1810 0.99970650
89122
MORELOS B
1 16274U 85109B 00223.33258916 -.00000005 00000-0 00000+0 0 9543
2 16274 1.5560 89.5711 0001273 11.0167 218.0190 1.00272326 43202
EUTELSAT II F1
1 20777U 90079B 00224.09931713 .00000112 00000-0 00000+0 6898
2 20777 1.3398 93.0453 0004190 46.4886 264.0253 1.00275097 16856
AS1ASAT 3
1 25126U 97086A 00221.37048611 -.00000288 00000-0 10000-4 0 3326
2 25126 7.1218 291.3069 0048368 338.8396 120.3853 1.00273882 10448
INTELSAT 805
1 25371U 98037A 00223.15300705 -.00000297 00000-0 00000+0 0 2387
2 25371 0.0309 272.5299 0003525 247.9161 158.0516 1.00271603 7893
INTELSAT 806
1 25239U 98014A 00221.20890226 -.00000275 00000-0 00000-0 0 3053
2 25239 0.0360 287.7943 0003595 234.8733 189.0306 1.00270223 9029
```

Figure 3.7 Two-line elements for some geostationary satellites.

Example 3.5 Using the data given in Fig. 3.7, calculate the longitude for INTELSAT 805.

solution Data from Fig. 3.7:

$$y := 2000 \qquad d := 223.15300705 \cdot \text{day} \qquad n := 1.0027160 \cdot \text{day}^{-1}$$

$$\Omega := 272.5299 \cdot \text{deg} \qquad e := .000352 \qquad \omega := 247.9161 \cdot \text{deg}$$

$$M := 158.0516 \cdot deg$$

The Julian day for Jan 0.0, 2000, denoted by JD_{00}, can be calculated using the method shown in Example 2.10, and this part is left as an exercise for the student. The Julian day is then $JD_{00} + d$, where d is the day, including the fraction thereof, of the year as given in the two-line elements:

$$JD_{00} := 2451543.5 \cdot day \qquad JD := JD_{00} + d$$

From Eq. (2.20):

$$JC := 36525 \cdot day \qquad JD_{ref} := 2415020 \cdot day$$

$$T := \frac{JD - JD_{ref}}{36525 \cdot day} \qquad T = 1.006068529$$

The fraction of the day is the UT:

$$UT := d - 223 \cdot day$$

In degrees, this is

$$UT := \frac{2\pi}{day} \cdot UT$$

Equation (2.34):

$$GST := 99.6910 \cdot deg + 36000.7689T \cdot deg + .0004T^2 \cdot deg + UT$$

$$GST := mod(GST, 2 \cdot \pi) \qquad GST = 14.015 \cdot deg$$

Equation (3.22):

$$\nu := M + 2 \cdot e \cdot M \qquad \nu = 158.163 \cdot deg$$

Equation (3.20):

$$\phi_{SSmean} := \omega + \Omega + M - GST$$

$$\phi_{SSmean} := mod(\phi_{SSmean}, 360 \cdot deg) \qquad \phi_{SSmean} = 304.483 \cdot deg$$

Equation (3.21):

$$\phi_{SS} := \omega + \Omega + \nu - GST$$

$$\phi_{SS} := mod(\phi_{SS}, 360 \cdot deg) \qquad \phi_{SS} = 304.594 \cdot deg$$

The location specified in *http://www.intelsat.com/* is 304.5°E.

Modified inclination and eccentricity parameters can be derived from the specified values of inclination i, the eccentricity e, and the angles ω and Ω. Details of these will be found in Maral and Bousquet (1998).

3.6 Earth Eclipse of Satellite

If the earth's equatorial plane coincided with the plane of the earth's orbit around the sun (the ecliptic plane), geostationary satellites would be eclipsed by the earth once each day. As it is, the equatorial plane is tilted at an angle of 23.4° to the ecliptic plane, and this keeps the satellite in full view of the sun for most days of the year, as illustrated by position *A* in Fig. 3.8. Around the spring and autumnal equinoxes, when the sun is crossing the equator, the satellite does pass into the earth's shadow at certain periods, these being periods of eclipse as illustrated in Fig. 3.8. The spring equinox is the first day of spring, and the autumnal equinox is the first day of autumn.

Eclipses begin 23 days before equinox and end 23 days after equinox. The eclipse lasts about 10 min at the beginning and end of the eclipse period and increases to a maximum duration of about 72 min at full eclipse (Spilker, 1977). During an eclipse, the solar cells do not function, and operating power must be supplied from batteries. This is discussed further in Sec. 7.2, and Fig. 7.3 shows eclipse time as a function of days of the year.

Where the satellite longitude is east of the earth station, the satellite enters eclipse during daylight (and early evening) hours for the

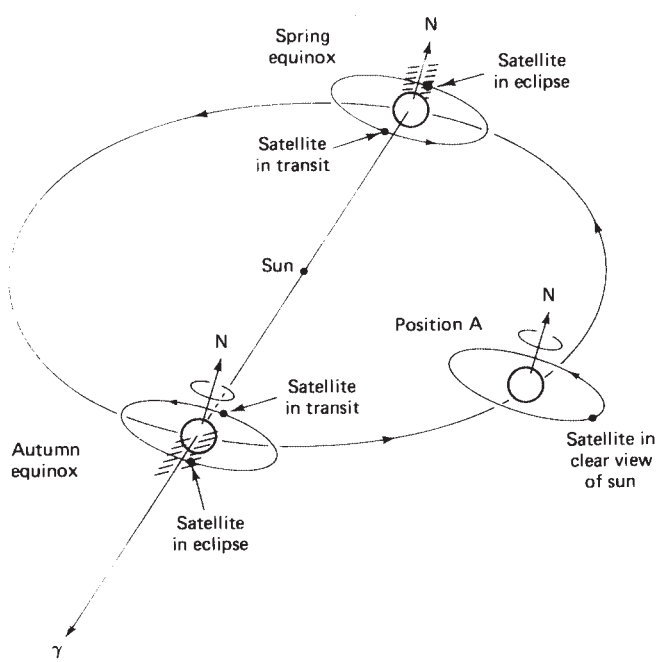

Figure 3.8 Showing satellite eclipse and satellite sun transit around spring and autumn equinoxes.

earth station, as illustrated in Fig. 3.9. This can be undesirable if the satellite has to operate on reduced battery power. Where the satellite longitude is west of the earth station, eclipse does not occur until the earth station is in darkness, when usage is likely to be low. Thus satellite longitudes which are west, rather than east, of the earth station are more desirable.

3.7 Sun Transit Outage

Another event which must be allowed for during the equinoxes is the transit of the satellite between earth and sun (see Fig. 3.8), such that the sun comes within the beamwidth of the earth station antenna. When this happens, the sun appears as an extremely noisy source which completely blanks out the signal from the satellite. This effect is termed *sun transit outage,* and it lasts for short periods each day for about 6 days around the equinoxes. The occurrence and duration of the sun transit outage depends on the latitude of the earth station, a maximum outage time of 10 min being typical.

3.8 Launching Orbits

Satellites may be *directly injected* into low-altitude orbits, up to about 200 km altitude, from a launch vehicle. Launch vehicles may be classified as *expendable* or *reusable.* Typical of the expendable launchers are the U.S. Atlas-Centaur and Delta rockets and the European Space Agency Ariane rocket. Japan, China, and Russia all have their own expendable launch vehicles, and one may expect to see competition for commercial launches among the countries which have these facilities.

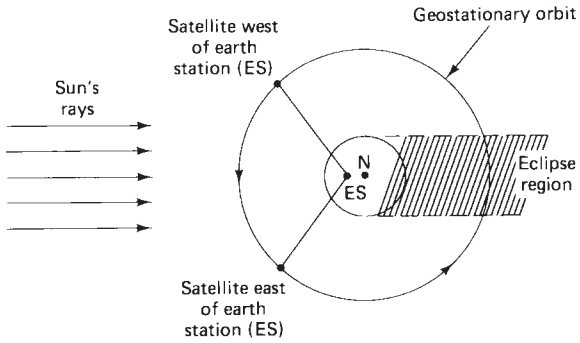

Figure 3.9 A satellite east of the earth station enters eclipse during daylight (busy) hours at the earth station. A satellite west of the earth station enters eclipse during night and early morning (nonbusy) hours.

Until the tragic mishap with the Space Shuttle in 1986, this was to be the primary transportation system for the United States. As a reusable launch vehicle, the shuttle, also referred to as the Space Transportation System (STS), was planned to eventually replace expendable launch vehicles for the United States (Mahon and Wild, 1984).

Where an orbital altitude greater than about 200 km is required, it is not economical in terms of launch vehicle power to perform direct injection, and the satellite must be placed into transfer orbit between the initial low earth orbit and the final high-altitude orbit. In most cases, the transfer orbit is selected to minimize the energy required for transfer, and such an orbit is known as a *Hohmann transfer* orbit. The time required for transfer is longer for this orbit than all other possible transfer obits.

Assume for the moment that all orbits are in the same plane and that transfer is required between two circular orbits, as illustrated in Fig. 3.10. The Hohmann elliptical orbit is seen to be tangent to the low-altitude orbit at perigee and to the high-altitude orbit at apogee. At the perigee, in the case of rocket launch, the rocket injects the satellite with the required thrust into the transfer orbit. With the STS, the satellite must carry a perigee kick motor which imparts the required thrust at perigee. Details of the expendable vehicle launch are shown in Fig. 3.11 and of the STS launch, in Fig. 3.12. At apogee, the apogee kick motor (AKM) changes the velocity of the satellite to place it into a circular orbit in the same plane. As shown in Fig. 3.11, it takes 1 to 2 months for the satellite to be fully operational (although not shown in Fig. 3.12, the same conditions apply). Throughout the launch and acquisition phases, a network of ground stations, spread across the earth, is required to perform the tracking, telemetry, and command (TT&C) functions.

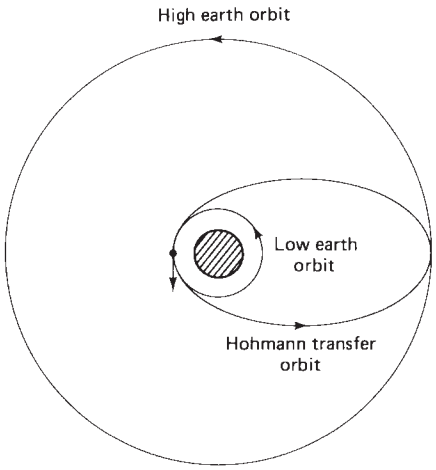

Figure 3.10 Hohmann transfer orbit.

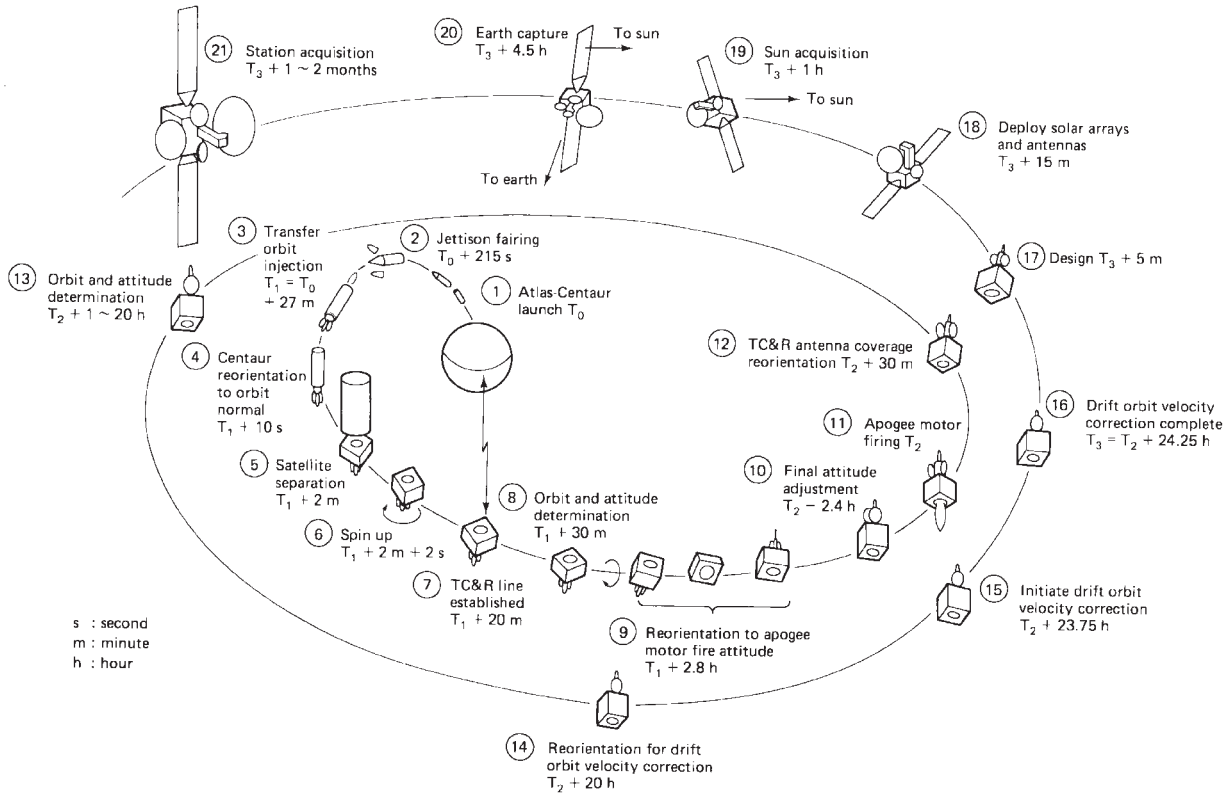

Figure 3.11 From launch to station of INTELSAT V (by Atlas-Centaur). (© *KDD Engineering & Consulting, Inc., Tokyo. From Satellite Communications Technology, edited by K. Miya, 1981.*)

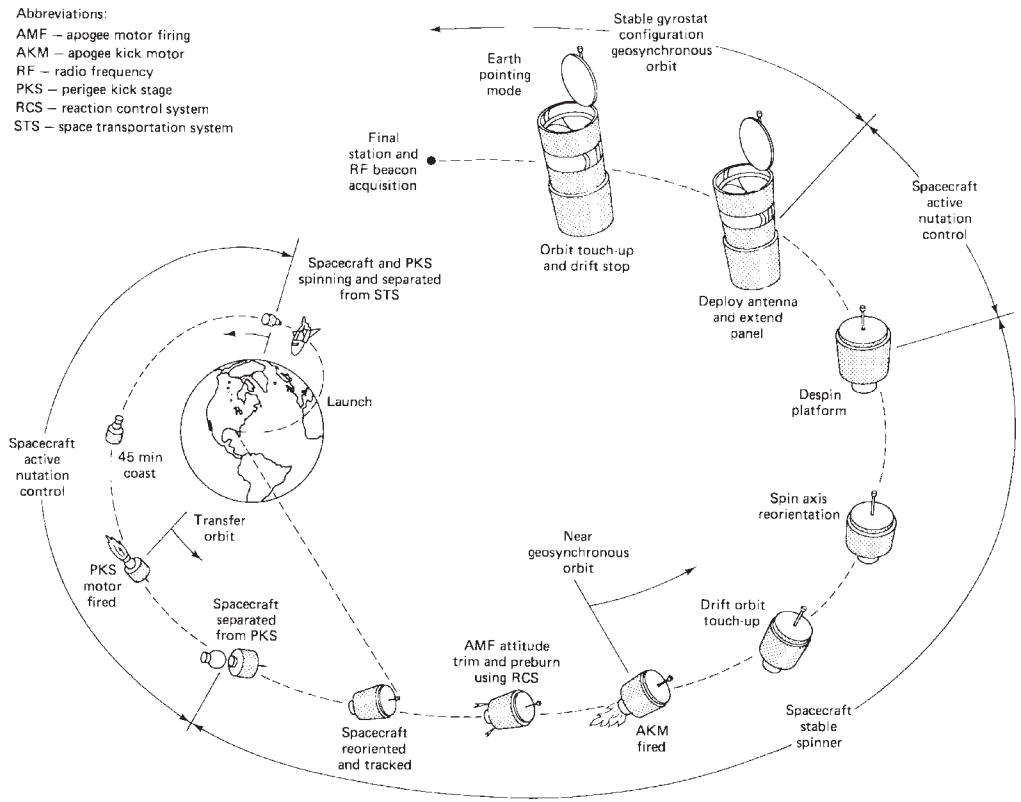

Figure 3.12 STS-7/Anik C2 mission scenario. (*From Anik C2 Launch Handbook, courtesy of Telesat Canada.*)

Velocity changes in the same plane change the geometry of the orbit but not its inclination. In order to change the inclination, a velocity change is required normal to the orbital plane. Changes in inclination can be made at either one of the nodes, without affecting the other orbital parameters. Since energy must be expended to make any orbital changes, a geostationary satellite should be launched initially with as low an orbital inclination as possible. It will be shown shortly that the smallest inclination obtainable at initial launch is equal to the latitude of the launch site. Thus the farther away from the equator a launch site is, the less useful it is, since the satellite has to carry extra fuel to effect a change in inclination. Russia does not have launch sites south of 45°N, which makes the launching of geostationary satellites a much more expensive operation for Russia than for other countries which have launch sites closer to the equator.

Prograde (direct) orbits (Fig. 2.4) have an easterly component of velocity, and these launches gain from the earth's rotational velocity. For a given launcher size, a significantly larger payload can be launched in an easterly direction than is possible with a retrograde (westerly) launch. In particular, easterly launches are used for the initial launch into the geostationary orbit.

The relationship between inclination, latitude, and azimuth may be seen as follows [this analysis is based on that given in Bate et al. (1971)]. Figure 3.13*a* shows the geometry at the launch site *A* at latitude λ (the slight difference between geodetic and geocentric latitudes may be ignored here). The dotted line shows the satellite earth track, the satellite having been launched at some azimuth angle Az. Angle *i* is the resulting inclination.

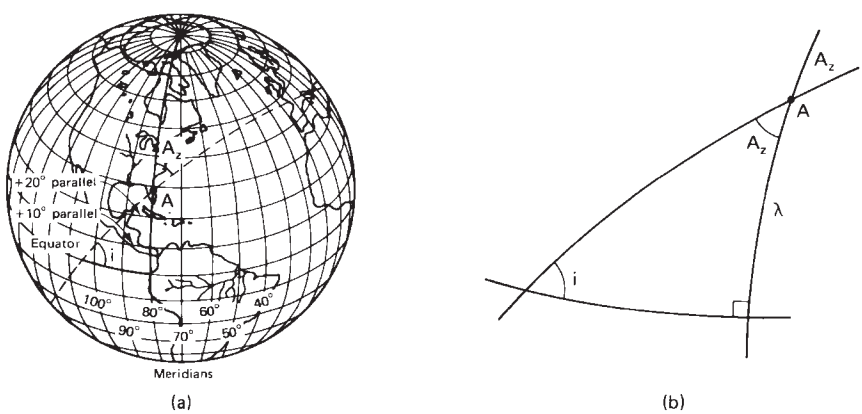

Figure 3.13 (*a*) Launch site *A,* showing launch azimuth A_z; (*b*) enlarged version of the spherical triangle shown in (*a*). λ is the latitude of the launch site.

The spherical triangle of interest is shown in more detail in Fig. 3.13*b*. This is a right spherical triangle, and Napier's rule for this gives

$$\cos i = \cos \lambda \sin Az \tag{3.23}$$

For a prograde orbit (see Fig. 2.4 and Sec. 2.5), $0 \leq i < 90°$, and hence $\cos i$ is positive. Also, $-90° \leq \lambda \leq 90°$, and hence $\cos \lambda$ is also positive. It follows therefore from Eq. (3.23) that $0 \leq Az \leq 180°$, or the launch azimuth must be easterly in order to obtain a prograde orbit, confirming what was already known.

For a fixed λ, Eq. (3.23) also shows that to minimize the inclination i, $\cos i$ should be a maximum, which requires $\sin Az$ to be maximum, or $Az = 90°$. Equation (3.23) shows that under these conditions

$$\cos i_{\min} = \cos \lambda \tag{3.24}$$

or

$$i_{\min} = \lambda \tag{3.25}$$

Thus the *lowest* inclination possible on initial launch is equal to the latitude of the launch site. This result confirms the converse statement made in Sec. 2.5 under *inclination* that the greatest latitude north or south is equal to the inclination. From Cape Kennedy the smallest initial inclination which can be achieved for easterly launches is approximately 28°.

3.9 Problems

3.1. Explain what is meant by the geostationary orbit. How do the geostationary orbit and a geosynchronous orbit differ?

3.2. (*a*) Explain why there is only one geostationary orbit. (*b*) Show that the range d from an earth station to a geostationary satellite is given by $d = \sqrt{(R \sin \mathrm{El})^2 + h(2R + h)} - R \sin El$, where R is the earth's radius (assumed spherical), h is the height of the geostationary orbit above the equator, and El is the elevation angle of the earth station antenna.

3.3. Determine the latitude and longitude of the farthest north earth station which can link with any given geostationary satellite. The longitude should be given relative to the satellite longitude, and a minimum elevation angle of 5° should be assumed for the earth station antenna. A spherical earth of mean radius 6371 km may be assumed.

3.4. An earth station at latitude 30°S is in communication with an earth station on the same longitude at 30°N, through a geostationary satellite. The

satellite longitude is 20° east of the earth stations. Calculate the antenna look angles for each earth station and the round-trip time, assuming this consists of propagation delay only.

3.5. Determine the maximum possible longitudinal separation which can exist between a geostationary satellite and an earth station while maintaining line-of-sight communications, assuming the minimum angle of elevation of the earth station antenna is 5°. State also the latitude of the earth station.

3.6. An earth station is located at latitude 35°N and longitude 100°W. Calculate the antenna look angles for a satellite at 67°W.

3.7. An earth station is located at latitude 12°S and longitude 52°W. Calculate the antenna look angles for a satellite at 70°W.

3.8. An earth station is located at latitude 35°N and longitude 65°E. Calculate the antenna look angles for a satellite at 19°E.

3.9. An earth station is located at latitude 30°S and longitude 130°E. Calculate the antenna look angles for a satellite at 156°E.

3.10. Calculate for your home location the look angles required to receive from the satellite (*a*) immediately east and (*b*) immediately west of your longitude.

3.11. CONUS is the acronym used for the 48 contiguous states. Allowing for a 5° elevation angle at earth stations, verify that the geostationary arc required to cover CONUS is 55–136°W.

3.12. Referring to Prob. 3.11, verify that the geostationary arc required for CONUS plus Hawaii is 85–136° W and for CONUS plus Alaska is 115–136°W.

3.13. By taking the Mississippi River as the dividing line between east and west, verify that the western region of the United States would be covered by satellites in the geostationary arc from 136–163°W and the eastern region by 25–55°W. Assume a 5° angle of elevation.

3.14. (*a*) An earth station is located at latitude 35°N. Assuming a polar mount antenna is used, calculate the angle of tilt. (*b*) Would the result apply to polar mounts used at the earth stations specified in Probs. 3.6 and 3.8?

3.15. Repeat Prob. 3.14 (*a*) for an earth station located at latitude 12°S. Would the result apply to a polar mount used at the earth station specified in Prob. 3.7?

3.16. Repeat Prob. 3.14 (*a*) for an earth station located at latitude 30°S. Would the result apply to a polar mount used at the earth station specified in Prob. 3.9?

3.17. Calculate the angle of tilt required for a polar mount antenna used at your home location.

3.18. The borders of a certain country can be roughly represented by a triangle with coordinates 39°E, 33.5°N; 43.5°E, 37.5°N; 48.5°E, 30°N. If a geostationary satellite has to be visible from *any point* in the country determine the limits of visibility (i.e., the limiting longitudinal positions for a satellite on the geostationary arc). Assume a minimum angle of elevation for the earth station antenna of 5°, and show which geographic location fixes which limit.

3.19. Explain what is meant by the *earth eclipse* of an earth-orbiting satellite. Why is it preferable to operate with a satellite positioned west, rather than east, of earth station longitude?

3.20. Explain briefly what is meant by *sun transit outage*.

Chapter

7

The Space Segment

7.1 Introduction

A satellite communications system can be broadly divided into two segments, a ground segment and a space segment. The space segment will obviously include the satellites, but it also includes the ground facilities needed to keep the satellites operational, these being referred to as the *tracking, telemetry, and command* (TT&C) facilities. In many networks it is common practice to employ a ground station solely for the purpose of TT&C.

The equipment carried aboard the satellite also can be classified according to function. The *payload* refers to the equipment used to provide the service for which the satellite has been launched. The *bus* refers not only to the vehicle which carries the payload but also to the various subsystems which provide the power, attitude control, orbital control, thermal control, and command and telemetry functions required to service the payload.

In a communications satellite, the equipment which provides the connecting link between the satellite's transmit and receive antennas is referred to as the *transponder*. The transponder forms one of the main sections of the payload, the other being the antenna subsystems. In this chapter the main characteristics of certain bus systems and payloads are described.

7.2 The Power Supply

The primary electrical power for operating the electronic equipment is obtained from solar cells. Individual cells can generate only small amounts of power, and therefore, arrays of cells in series-parallel connection are required. Figure 7.1 shows the solar cell panels for the HS

376 satellite manufactured by Hughes Space and Communications Company. The spacecraft is 216 cm in diameter and 660 cm long when fully deployed in orbit. During the launch sequence, the outer cylinder is telescoped over the inner one, to reduce the overall length. Only the outer panel generates electrical power during this phase. In geostationary orbit the telescoped panel is fully extended so that both are exposed to sunlight. At the beginning of life, the panels produce 940 W dc power, which may drop to 760 W at the end of 10 years. During eclipse, power is provided by two nickel-cadmium long-life batteries, which will deliver 830 W. At the end of life, battery recharge time is less than 16 h.

The HS 376 spacecraft is a spin-stabilized spacecraft (the gyroscopic effect of the spin is used for mechanical orientational stability, as

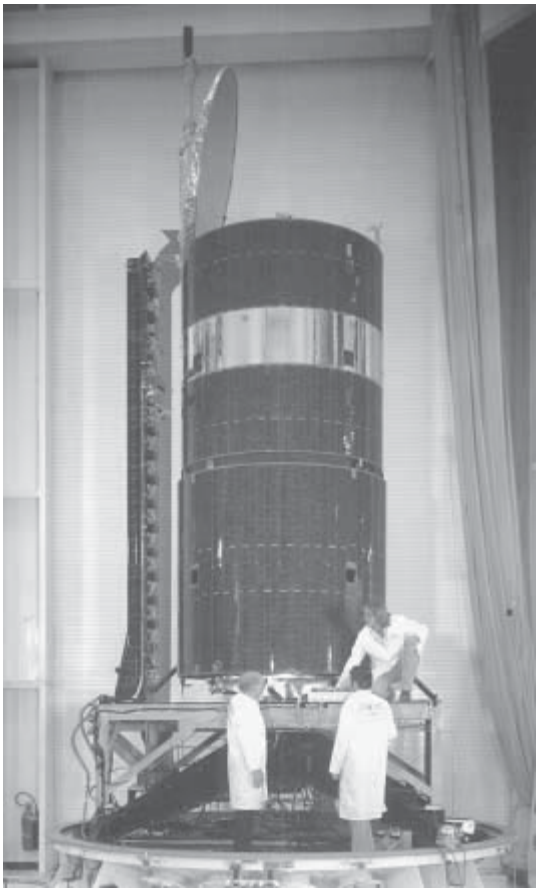

Figure 7.1 The HS 376 satellite. (*Courtesy of Hughes Aircraft Company Space and Communications Group.*)

described in Sec. 7.3). Thus the arrays are only partially in sunshine at any given time, which places a limitation on power.

Higher powers can be achieved with solar panels arranged in the form of rectangular *solar sails*. Solar sails must be folded during the launch phase and extended when in geostationary orbit. Figure 7.2 shows the HS 601 satellite manufactured by Hughes Space and Communications Company. As shown, the solar sails are folded up on each side, and when fully extended, they stretch to 67 ft (316.5 cm) from tip to tip. The full complement of solar cells is exposed to the sunlight, and the sails are arranged to rotate to track the sun, so they are capable of greater power output than cylindrical arrays having a comparable number of cells. The HS 601 can be designed to provide dc

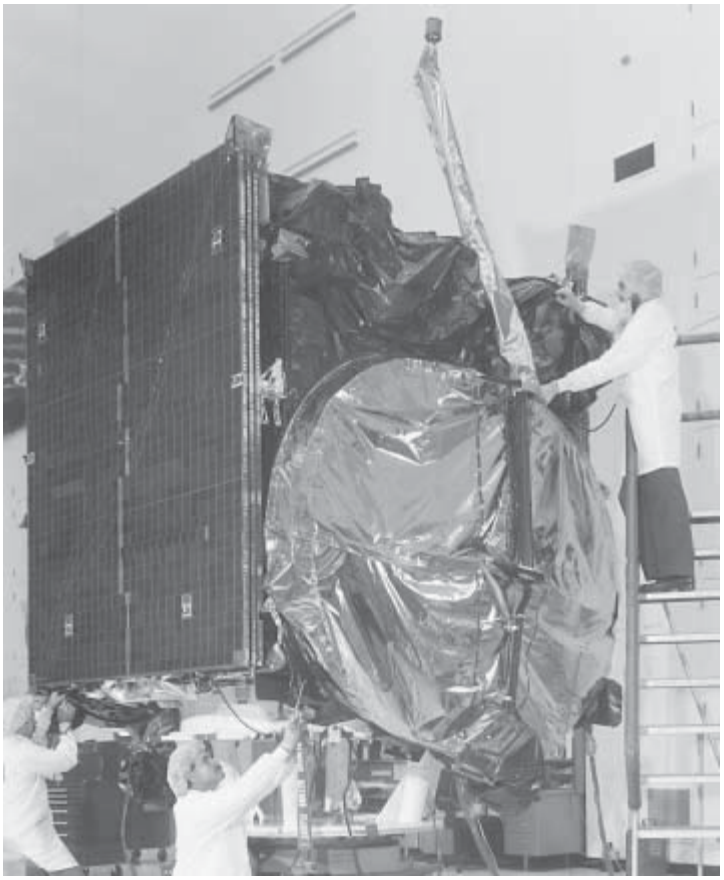

Figure 7.2 Aussat B1 (renamed Optus B), Hughes first HS 601 communications satellite is prepared for environmental testing. (*Courtesy of Hughes Aircraft Company Space and Communications Group.*)

power from 2 to 6 kW. In comparing the power capacity of cylindrical and solar-sail satellites, the crossover point is estimated to be about 2 kW, where the solar-sail type is more economical than the cylindrical type (Hyndman, 1991).

As discussed in Sec. 3.6, the earth will eclipse a geostationary satellite twice a year, during the spring and autumnal equinoxes. Daily eclipses start approximately 23 days before and end approximately 23 days after the equinox for both the spring and autumnal equinoxes and can last up to 72 min at the actual equinox days. Figure 7.3 shows the graph relating eclipse period to the day of year. In order to maintain service during an eclipse, storage batteries must be provided. Nickel-cadmium (Ni-Cd) batteries continue to be used, as shown in the Hughes HS 376 satellite, but developments in nickel-hydrogen (Ni-H_2) batteries offer significant improvement in power-weight ratio. Nickel-hydrogen batteries are used in the Hughes HS 601 and in the Intelsat VI (Pilcher, 1982) and Intelsat VII (Lilly, 1990) satellites.

7.3 Attitude Control

The *attitude* of a satellite refers to its orientation in space. Much of the equipment carried aboard a satellite is there for the purpose of controlling its attitude. Attitude control is necessary, for example, to

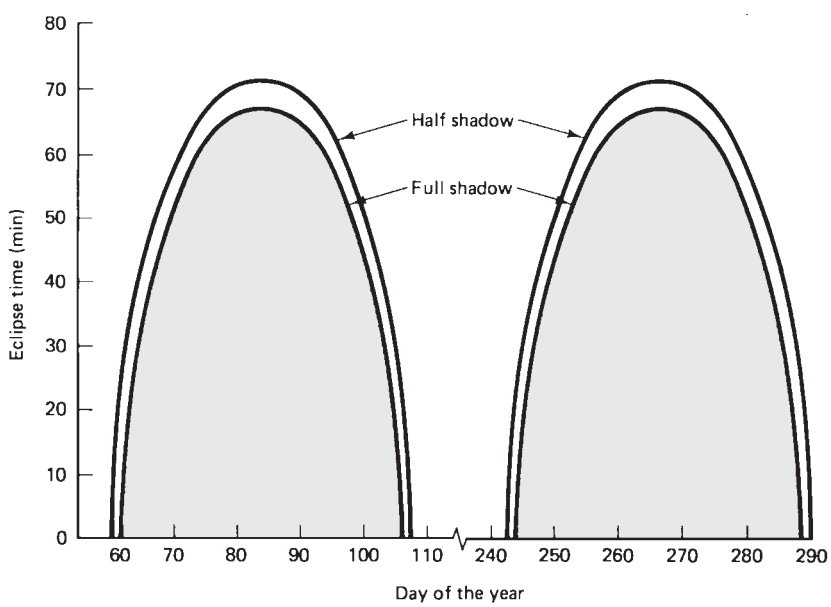

Figure 7.3 Satellite eclipse time as a function of the current day of the year. (*From Spilker, 1977. Reprinted by permission of Prentice-Hall, Englewood Cliffs, NJ.*)

ensure that directional antennas point in the proper directions. In the case of earth environmental satellites, the earth-sensing instruments must cover the required regions of the earth, which also requires attitude control. A number of forces, referred to as *disturbance torques,* can alter the attitude, some examples being the gravitational fields of the earth and the moon, solar radiation, and meteorite impacts. Attitude control must not be confused with *station keeping,* which is the term used for maintaining a satellite in its correct orbital position, although the two are closely related.

To exercise attitude control, there must be available some measure of a satellite's orientation in space and of any tendency for this to shift. In one method, infrared sensors, referred to as *horizon detectors,* are used to detect the rim of the earth against the background of space. With the use of four such sensors, one for each quadrant, the center of the earth can be readily established as a reference point. Any shift in orientation is detected by one or other of the sensors, and a corresponding control signal is generated which activates a restoring torque.

Usually, the attitude-control process takes place aboard the satellite, but it is also possible for control signals to be transmitted from earth, based on attitude data obtained from the satellite. Also, where a shift in attitude is desired, an *attitude maneuver* is executed. The control signals needed to achieve this maneuver may be transmitted from an earth station.

Controlling torques may be generated in a number of ways. *Passive attitude control* refers to the use of mechanisms which stabilize the satellite without putting a drain on the satellite's energy supplies; at most, infrequent use is made of these supplies, for example, when thruster jets are impulsed to provide corrective torque. Examples of passive attitude control are *spin stabilization* and *gravity gradient stabilization.* The latter depends on the interaction of the satellite with the gravitational field of the central body and has been used, for example, with the Radio Astronomy Explorer-2 satellite which was placed in orbit around the moon (Wertz, 1984). For communications satellites, spin stabilization is often used, and this is described in more detail in Sec. 7.3.1.

The other form of attitude control is *active control.* With active attitude control, there is no overall stabilizing torque present to resist the disturbance torques. Instead, corrective torques are applied as required in response to disturbance torques. Methods used to generate active control torques include momentum wheels, electromagnetic coils, and mass expulsion devices such as gas jets and ion thrusters. The electromagnetic coil works on the principle that the earth's magnetic field exerts a torque on a current-carrying coil and that this torque can be controlled through control of the current. However, the

method is of use only for satellites relatively close to the earth. The use of momentum wheels is described in more detail in Sec. 7.3.2.

The three axes which define a satellite's attitude are its *roll, pitch,* and *yaw* (RPY) axes. These are shown relative to the earth in Fig. 7.4. All three axes pass through the center of gravity of the satellite. For an equatorial orbit, movement of the satellite about the roll axis moves the antenna footprint north and south; movement about the pitch axis moves the footprint east and west; and movement about the yaw axis rotates the antenna footprint.

7.3.1 Spinning satellite stabilization

Spin stabilization may be achieved with cylindrical satellites. The satellite is constructed so that it is mechanically balanced about one particular axis and is then set spinning around this axis. For geostationary satellites, the spin axis is adjusted to be parallel to the N-S axis of the earth, as illustrated in Fig. 7.5. Spin rate is typically in the range of 50 to 100 rev/min. Spin is initiated during the launch phase by means of small gas jets.

In the absence of disturbance torques, the spinning satellite would maintain its correct attitude relative to the earth. Disturbance torques are generated in a number of ways, both external and internal to the satellite. Solar radiation, gravitational gradients, and meteorite impacts are all examples of external forces which can give rise to disturbance torques. Motor-bearing friction and the movement of

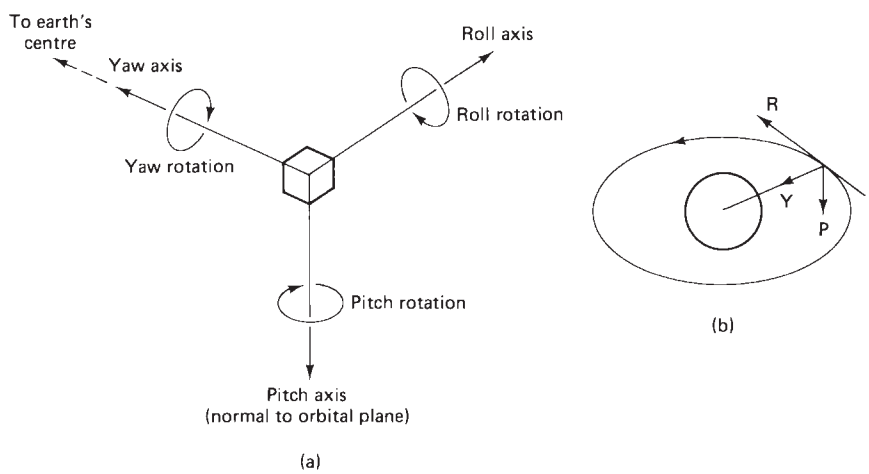

Figure 7.4 (*a*) Roll, pitch, and yaw axes. The yaw axis is directed toward the earth's center, the pitch axis is normal to the orbital plane, and the roll axis is perpendicular to the other two. (*b*) RPY axes for the geostationary orbit. Here, the roll axis is tangential to the orbit and lies along the satellite velocity vector.

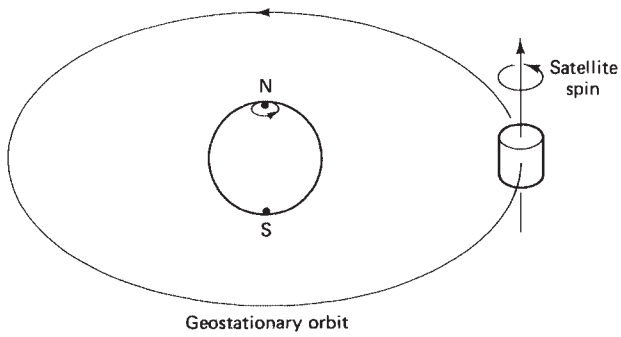

Figure 7.5 Spin stabilization in the geostationary orbit. The spin axis lies along the pitch axis, parallel to the earth's N-S axis.

satellite elements such as the antennas also can give rise to disturbance torques. The overall effect is that the spin rate will decrease, and the direction of the angular spin axis will change. Impulse-type thrusters, or jets, can be used to increase the spin rate again and to shift the axis back to its correct N-S orientation. *Nutation,* which is a form of wobbling, can occur as a result of the disturbance torques and/or from misalignment or unbalance of the control jets. This nutation must be damped out by means of energy absorbers known as *nutation dampers.*

Where an omnidirectional antenna is used (e.g., as shown for the INTELSAT I and II satellites in Fig. 1.1), the antenna, which points along the pitch axis, also rotates with the satellite. Where a directional antenna is used, which is more common for communications satellites, the antenna must be despun, giving rise to a dual-spin construction. An electric motor drive is used for despinning the antenna subsystem.

Figure 7.6 shows the Hughes HS 376 satellite in more detail. The antenna subsystem consists of a parabolic reflector and feed horns mounted on the despun shelf, which also carries the communications repeaters (transponders). The antenna feeds can therefore be connected directly to the transponders without the need for radiofrequency (rf) rotary joints, while the complete platform is despun. Of course, control signals and power must be transferred to the despun section, and a mechanical bearing must be provided. The complete assembly for this is known as the *bearing and power transfer assembly* (BAPTA). Figure 7.7 shows a photograph of the internal structure of the HS 376.

Certain dual-spin spacecraft obtain spin stabilization from a spinning flywheel rather than by spinning the satellite itself. These flywheels are termed *momentum wheels,* and their average momentum is referred to as *momentum bias.* Reaction wheels, described in the next section, operate at zero momentum bias.

7.3.2 Momentum wheel stabilization

In the previous section the gyroscopic effect of a spinning satellite was shown to provide stability for the satellite attitude. Stability also can be achieved by utilizing the gyroscopic effect of a spinning flywheel, and this approach is used in noncylindrical satellites such as the INTELSAT V type satellites shown in Fig. 1.1 and the Anik-E satellites (Sec. 7.10). The complete unit, termed a *momentum wheel,* consists of a flywheel, the bearing assembly, the casing, and an electric drive motor with associated electronic control circuitry. The flywheel is attached to the rotor, which consists of a permanent magnet providing the magnetic field for motor action. The stator of the motor is attached

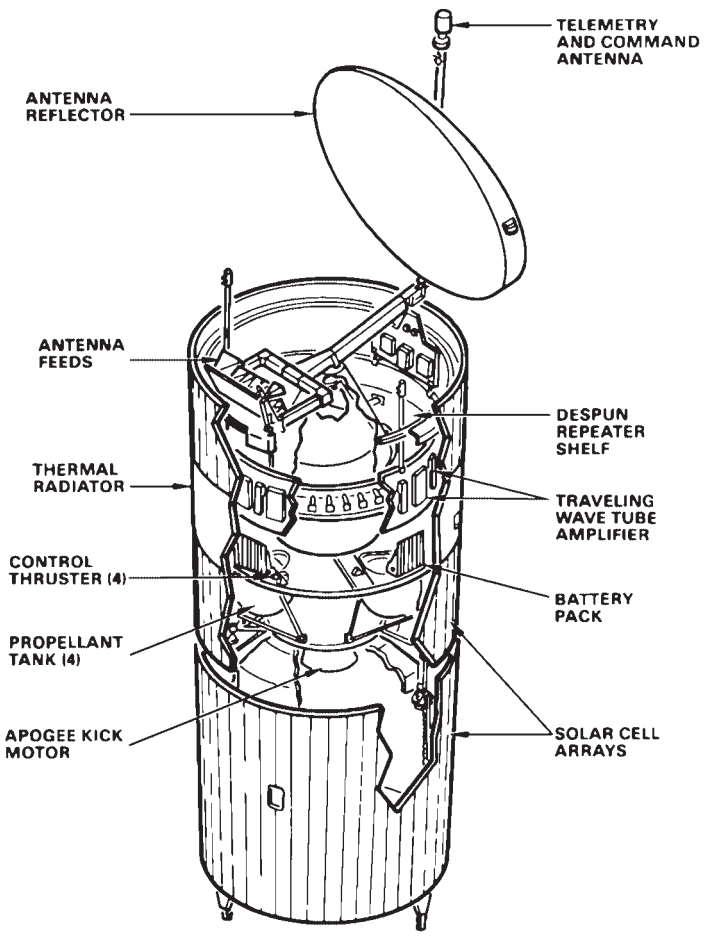

Figure 7.6 HS 376 spacecraft. (*Courtesy of Hughes Aircraft Company Space and Communications Group.*)

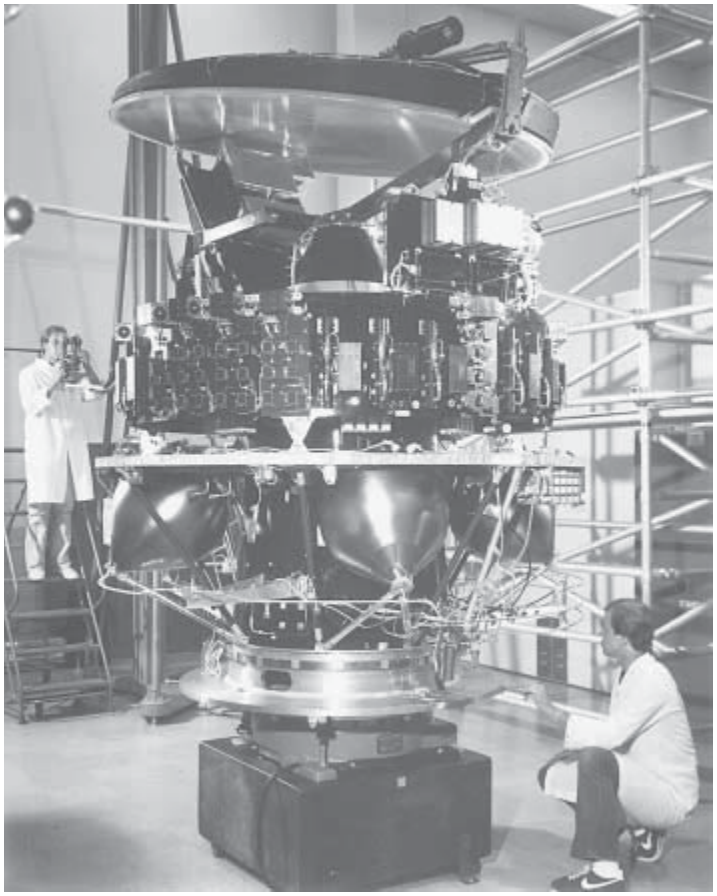

Figure 7.7 Technicians check the alignment of the Telestar 3 communications satellite, shown without its cylindrical panels. The satellite, built for the American Telephone and Telegraph Co., carries both traveling-wave tube and solid-state power amplifiers, as shown on the communications shelf surrounding the center of the spacecraft. The traveling-wave tubes are the cylindrical instruments. (*Courtesy of Hughes Aircraft Company Space and Communications Group.*)

to the body of the satellite. Thus the motor provides the coupling between the flywheel and the satellite structure. Speed and torque control of the motor is exercised through the currents fed to the stator. The housing for the momentum wheel is evacuated to protect the wheel from adverse environmental effects, and the bearings have controlled lubrication that lasts over the lifetime of the satellite. TELDIX manufactures momentum wheels ranging in size from 20, 26, 35, 50, to 60 cm in diameter that are used in a wide variety of satellites. Details of these will be found in Chetty (1991).

The term *momentum wheel* is usually reserved for wheels that operate at nonzero momentum. This is termed a *momentum bias.* Such a wheel provides passive stabilization for the yaw and roll axes when the axis of rotation of the wheel lies along the pitch axis, as shown in Fig. 7.8*a.* Control about the pitch axis is achieved by changing the speed of the wheel.

When a momentum wheel is operated with zero momentum bias, it is generally referred to as a *reaction wheel.* Reaction wheels are used in three-axis stabilized systems. Here, as the name suggests, each axis is stabilized by a reaction wheel, as shown in Fig. 7.8*c.* Reaction

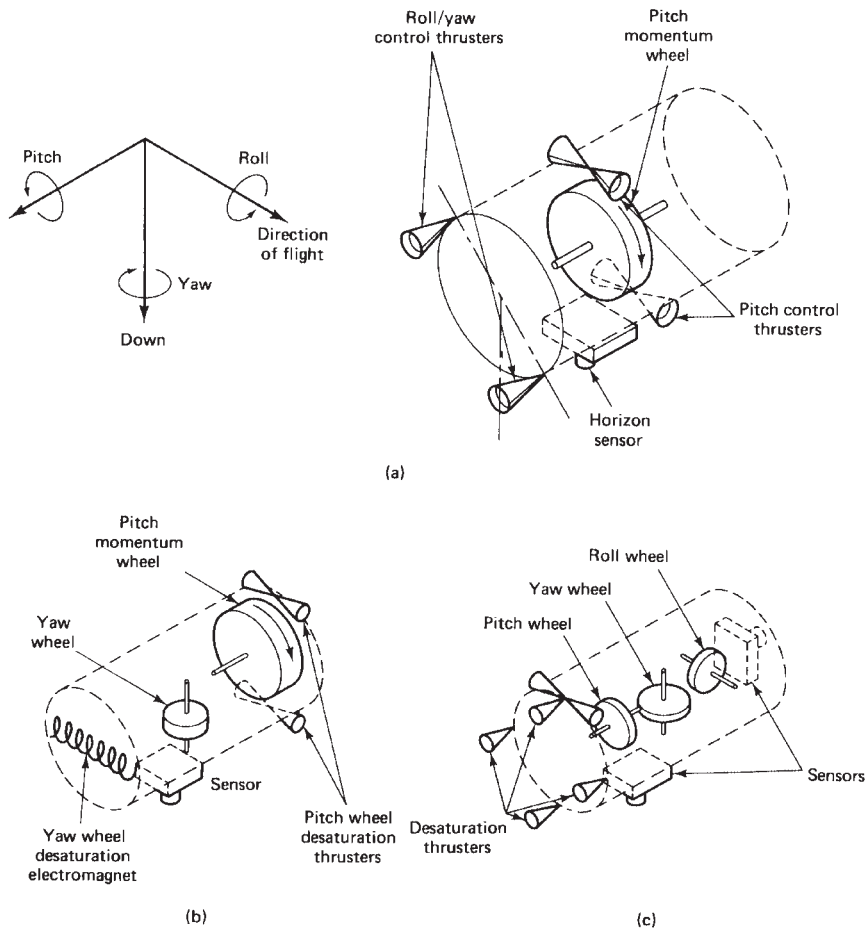

Figure 7.8 Alternative momentum wheel stabilization systems: (*a*) one-wheel; (*b*) two-wheel; (*c*) three-wheel. (*Reprinted with permission from Spacecraft Attitude Determination and Control, edited by James R. Wertz. Copyright @ 1984 by D. Reidel Publishing Company, Dordrecht, Holland.*)

wheels also can be combined with a momentum wheel to provide the control needed (Chetty, 1991). Random and cyclic disturbance torques tend to produce zero momentum on average. However, there will always be some disturbance torques which cause a cumulative increase in wheel momentum, and eventually at some point the wheel *saturates.* In effect, it reaches its maximum allowable angular velocity and can no longer take in any more momentum. Mass expulsion devices are then used to unload the wheel, that is, remove momentum from it (in the same way a brake removes energy from a moving vehicle). Of course, operation of the mass expulsion devices consumes part of the satellite's fuel supply.

7.4 Station Keeping

In addition to having its attitude controlled, it is important that a geostationary satellite be kept in its correct orbital slot. As described in Sec. 2.8.1, the equatorial ellipticity of the earth causes geostationary satellites to drift slowly along the orbit, to one of two stable points, at 75°E and 105°W. To counter this drift, an oppositely directed velocity component is imparted to the satellite by means of jets, which are pulsed once every 2 or 3 weeks. This results in the satellite drifting back through its nominal station position, coming to a stop, and recommencing the drift along the orbit until the jets are pulsed once again. These maneuvers are termed *east-west station-keeping maneuvers.* Satellites in the 6/4-GHz band must be kept within ±0.1° of the designated longitude, and in the 14/12-GHz band, within ±0.05°.

A satellite which is nominally geostationary also will drift in latitude, the main perturbing forces being the gravitational pull of the sun and the moon. These forces cause the inclination to change at a rate of about 0.85°/year. If left uncorrected, the drift would result in a cyclic change in the inclination, going from 0 to 14.67° in 26.6 years (Spilker, 1977) and back to zero, at which the cycle is repeated. To prevent the shift in inclination from exceeding specified limits, jets may be pulsed at the appropriate time to return the inclination to zero. Counteracting jets must be pulsed when the inclination is at zero to halt the change in inclination. These maneuvers are termed *north-south station-keeping maneuvers,* and they are much more expensive in fuel than are east-west station-keeping maneuvers. The north-south station-keeping tolerances are the same as those for east-west station keeping, ±0.1° in the C band and ±0.05° in the Ku band.

Orbital correction is carried out by command from the TT&C earth station, which monitors the satellite position. East-west and north-south station-keeping maneuvers are usually carried out using the same thrusters as are used for attitude control. Figure 7.9 shows

typical latitude and longitude variations for the Canadian Anik-C3 satellite which remain after station-keeping corrections are applied.

Satellite altitude also will show variations of about ±0.1 percent of the nominal geostationary height. If, for sake of argument, this is taken as 36,000 km, the total variation in the height is 72 km. A C-band satellite therefore can be anywhere within a box bound by this height and the ±0.1° tolerances on latitude and longitude. Approximating the geostationary radius as 42,164 km (see Sec. 3.1), an angle of 0.2° subtends an arc of approximately 147 km. Thus both the latitude and longitude sides of the box are 147 km. The situation is sketched in Fig. 7.10, which also shows the relative beamwidths of a 30-m and a 5-m antenna. As shown by Eq. (6.33), the −3-dB beamwidth of a 30-m antenna is about 0.12°, and of a 5-m antenna, about 0.7° at 6 GHz. Assuming 38,000 km (typical) for the slant range, the diameter of the 30-m beam at the satellite will be about 80 km. This beam does not encompass the whole of the box and therefore could miss the satellite. Such narrow-beam antennas therefore must track the satellite.

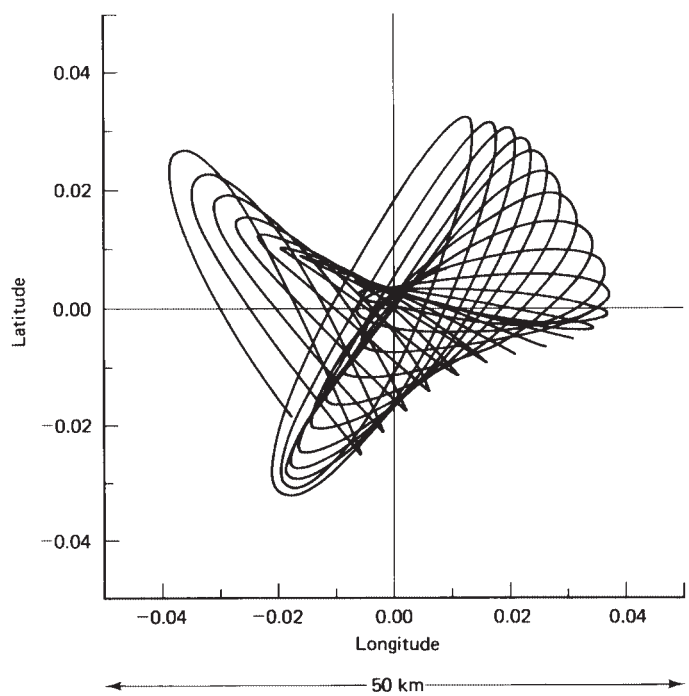

Figure 7.9 Typical satellite motion. (*From Telesat, Canada, 1983; courtesy of Telesat Canada.*)

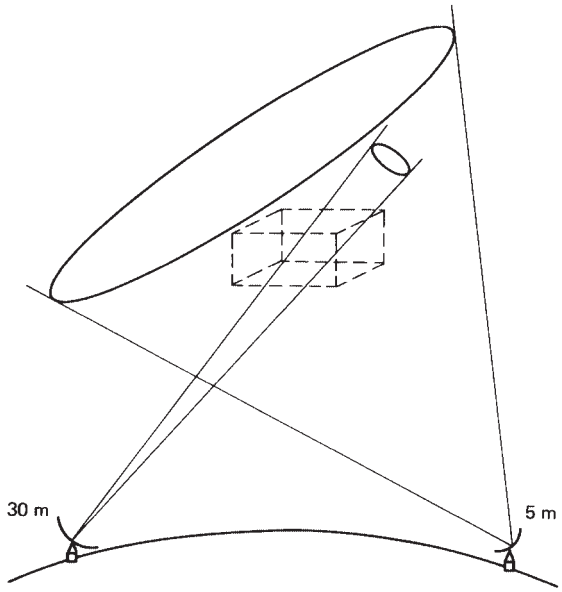

Figure 7.10 The rectangular box shows the positional limits for a satellite in geostationary orbit in relation to beams from a 30-m and a 5-m antenna.

The diameter of the 5-m antenna beam at the satellite will be about 464 km, and this does encompass the box, so tracking is not required. The positional uncertainty of the satellite also introduces an uncertainty in propagation time, which can be a significant factor in certain types of communications networks.

By placing the satellite in an inclined orbit, the north-south station-keeping maneuvers may be dispensed with. The savings in weight achieved by not having to carry fuel for these maneuvers allows the communications payload to be increased. The satellite is placed in an inclined orbit of about 2.5 to 3°, in the opposite sense to that produced by drift. Over a period of about half the predicted lifetime of the mission, the orbit will change to equatorial and then continue to increase in inclination. However, this arrangement requires the use of tracking antennas at the ground stations.

7.5 Thermal Control

Satellites are subject to large thermal gradients, receiving the sun's radiation on one side while the other side faces into space. In addition, thermal radiation from the earth and the earth's albedo, which is the fraction of the radiation falling on earth which is reflected,

can be significant for low-altitude earth-orbiting satellites, although it is negligible for geostationary satellites. Equipment in the satellite also generates heat which has to be removed. The most important consideration is that the satellite's equipment should operate as nearly as possible in a stable temperature environment. Various steps are taken to achieve this. Thermal blankets and shields may be used to provide insulation. Radiation mirrors are often used to remove heat from the communications payload. The mirrored thermal radiator for the Hughes HS 376 satellite can be seen in Fig. 7.1 and in Fig. 7.6. These mirrored drums surround the communications equipment shelves in each case and provide good radiation paths for the generated heat to escape into the surrounding space. One advantage of spinning satellites compared with body-stabilized is that the spinning body provides an averaging of the temperature extremes experienced from solar flux and the cold background of deep space.

In order to maintain constant temperature conditions, heaters may be switched on (usually on command from ground) to make up for the heat reduction which occurs when transponders are switched off. In INTELSAT VI, heaters are used to maintain propulsion thrusters and line temperatures (Pilcher, 1982).

7.6 TT&C Subsystem

The telemetry, tracking, and command subsystem performs several routine functions aboard the spacecraft. The telemetry, or telemetering, function could be interpreted as *measurement at a distance*. Specifically, it refers to the overall operation of generating an electrical signal proportional to the quantity being measured and encoding and transmitting this to a distant station, which for the satellite is one of the earth stations. Data which are transmitted as telemetry signals include attitude information such as that obtained from sun and earth sensors; environmental information such as the magnetic field intensity and direction, the frequency of meteorite impact, and so on; and spacecraft information such as temperatures, power supply voltages, and stored-fuel pressure. Certain frequencies have been designated by international agreement for satellite telemetry transmissions. During the transfer and drift orbital phases of the satellite launch, a special channel is used along with an omnidirectional antenna. Once the satellite is on station, one of the normal communications transponders may be used along with its directional antenna, unless some emergency arises which makes it necessary to switch back to the special channel used during the transfer orbit.

Telemetry and command may be thought of as complementary functions. The telemetry subsystem transmits information about the satellite to the earth station, while the command subsystem receives command signals from the earth station, often in response to telemetered information. The command subsystem demodulates and, if necessary, decodes the command signals and routes these to the appropriate equipment needed to execute the necessary action. Thus attitude changes may be made, communication transponders switched in and out of circuits, antennas redirected, and station-keeping maneuvers carried out on command. It is clearly important to prevent unauthorized commands from being received and decoded, and for this reason, the command signals are often encrypted. *Encrypt* is derived from a Greek word *kryptein,* meaning *to hide,* and represents the process of concealing the command signals in a secure code. This differs from the normal process of encoding, which is one of converting characters in the command signal into a code suitable for transmission.

Tracking of the satellite is accomplished by having the satellite transmit beacon signals which are received at the TT&C earth stations. Tracking is obviously important during the transfer and drift orbital phases of the satellite launch. Once it is on station, the position of a geostationary satellite will tend to be shifted as a result of the various disturbing forces, as described previously. Therefore, it is necessary to be able to track the satellite's movement and send correction signals as required. Tracking beacons may be transmitted in the telemetry channel, or by pilot carriers at frequencies in one of the main communications channels, or by special tracking antennas. Satellite range from the ground station is also required from time to time. This can be determined by measurement of the propagation delay of signals especially transmitted for ranging purposes.

It is clear that the telemetry, tracking, and command functions are complex operations which require special ground facilities in addition to the TT&C subsystems aboard the satellite. Figure 7.11 shows in block diagram form the TT&C facilities used by Canadian Telesat for its satellites.

7.7 Transponders

A transponder is the series of interconnected units which forms a single communications channel between the receive and transmit antennas in a communications satellite. Some of the units utilized by a transponder in a given channel may be common to a number of transponders. Thus, although reference may be made to a specific

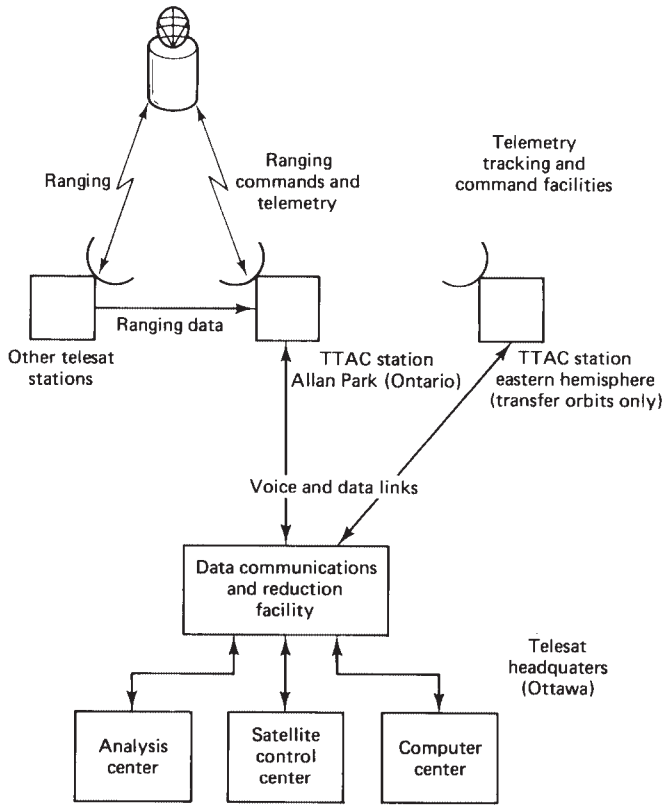

Figure 7.11 Satellite control system. (*From Telesat Canada, 1983; courtesy of Telesat Canada.*)

transponder, this must be thought of as an equipment *channel* rather than a single item of equipment.

Before describing in detail the various units of a transponder, the overall frequency arrangement of a typical C-band communications satellite will be examined briefly. The bandwidth allocated for C-band service is 500 MHz, and this is divided into subbands, one for each transponder. A typical transponder bandwidth is 36 MHz, and allowing for a 4-MHz guardband between transponders, 12 such transponders can be accommodated in the 500-MHz bandwidth. By making use of *polarization isolation,* this number can be doubled. Polarization isolation refers to the fact that carriers, which may be on the same frequency but with opposite senses of polarization, can be isolated from one another by receiving antennas matched to the incoming polarization. With linear polarization, vertically and horizontally polarized carriers can be separated in this way, and with circular polarization, left-hand circular and right-hand circular

polarizations can be separated. Because the carriers with opposite senses of polarization may overlap in frequency, this technique is referred to as *frequency reuse.* Figure 7.12 shows part of the frequency and polarization plan for a C-band communications satellite.

Frequency reuse also may be achieved with spot-beam antennas, and these may be combined with polarization reuse to provide an effective bandwidth of 2000 MHz from the actual bandwidth of 500 MHz.

For one of the polarization groups, Fig. 7.13 shows the channeling scheme for the 12 transponders in more detail. The incoming, or uplink, frequency range is 5.925 to 6.425 GHz. The carriers may be received on one or more antennas, all having the same polarization. The input filter passes the full 500-MHz band to the common receiver while rejecting out-of-band noise and interference such as might be caused by image signals. There will be many modulated carriers within this 500-MHz passband, and all of these are amplified and frequency-converted in the common receiver. The frequency conversion shifts the carriers to the downlink frequency band, which is also 500 MHz wide, extending from 3.7 to 4.2 GHz. At this point the signals are channelized into frequency bands which represent the individual transponder bandwidths. A commonly used value is 36 MHz for each transponder, which along with 4-MHz guard bands between channels allows the 500 MHz available bandwidth to accommodate 12 transponder channels. A transponder may handle one modulated carrier such as a TV signal, or it may handle a number of separate carriers simultaneously, each modulated by its own telephony or other baseband channel.

7.7.1 The wideband receiver

The wideband receiver is shown in more detail in Fig. 7.14. A duplicate receiver is provided so that if one fails, the other is automatically

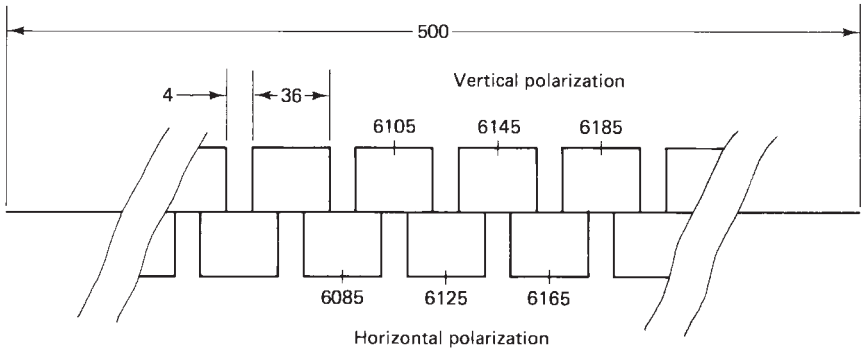

Figure 7.12 Section of an uplink frequency and polarization plan. Numbers refer to frequency in megahertz.

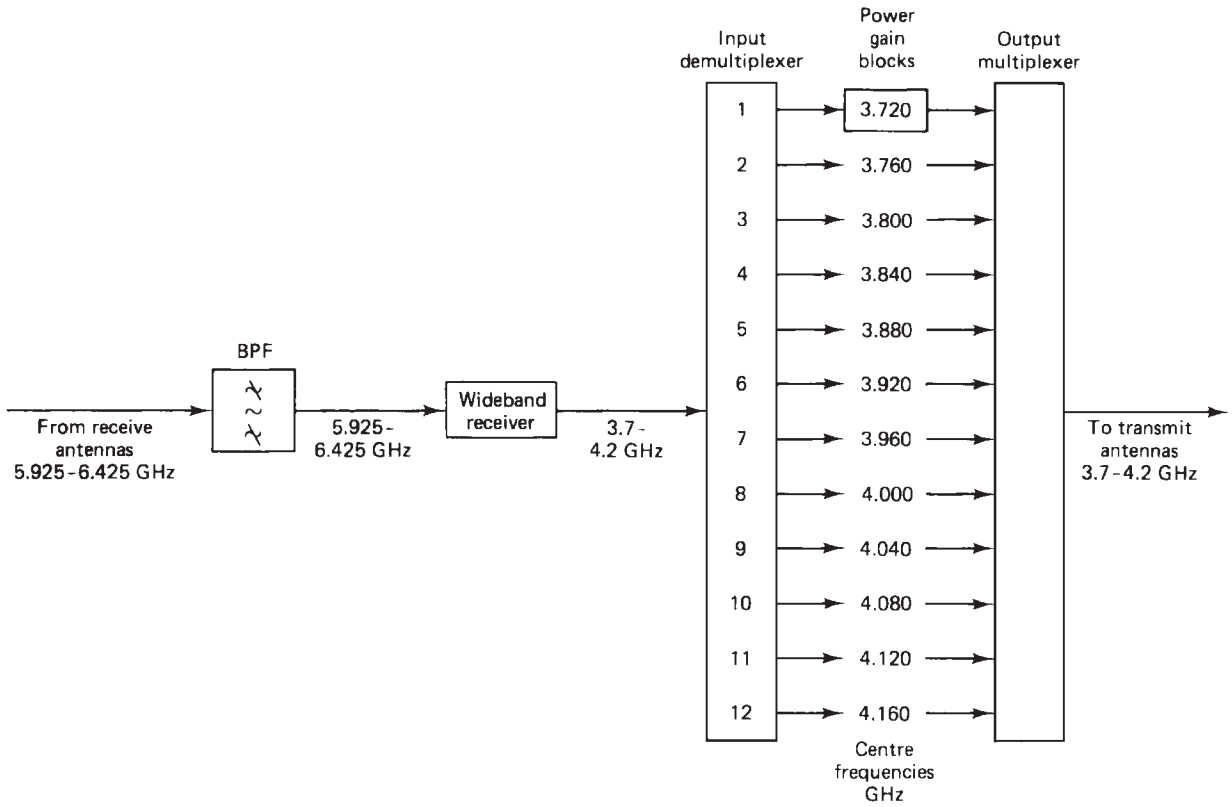

Figure 7.13 Satellite transponder channels. (*Courtesy of CCIR, CCIR Fixed Satellite Services Handbook, final draft 1984.*)

switched in. The combination is referred to as a *redundant receiver,* meaning that although two are provided, only one is in use at a given time.

The first stage in the receiver is a low-noise amplifier (LNA). This amplifier adds little noise to the carrier being amplified, and at the same time it provides sufficient amplification for the carrier to override the higher noise level present in the following mixer stage. In calculations involving noise, it is usually more convenient to refer all noise levels to the LNA input, where the total receiver noise may be expressed in terms of an equivalent noise temperature. In a well-designed receiver, the equivalent noise temperature referred to the LNA input is basically that of the LNA alone. The overall noise temperature must take into account the noise added from the antenna, and these calculations are presented in detail in Chap. 12. The equivalent noise temperature of a satellite receiver may be on the order of a few hundred kelvins.

The LNA feeds into a mixer stage, which also requires a local oscillator signal for the frequency-conversion process. The power drive from the local oscillator to the mixer input is about 10 dBm. The oscillator

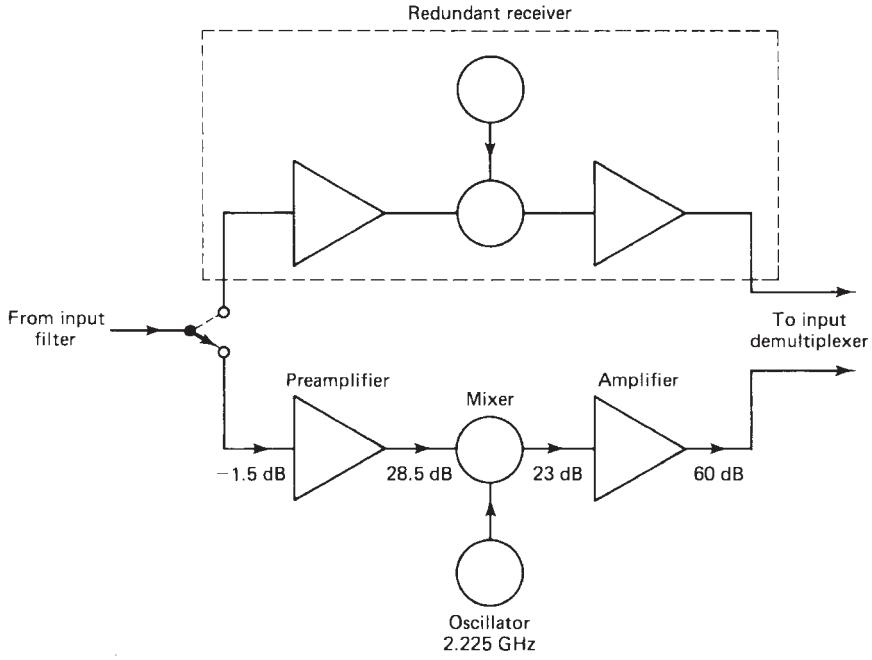

Figure 7.14 Satellite wideband receiver. (*Courtesy of CCIR, CCIR Fixed Satellite Services Handbook, final draft 1984.*)

frequency must be highly stable and have low phase noise. A second amplifier follows the mixer stage to provide an overall receiver gain of about 60 dB. The signal levels in decibels referred to the input are shown in Fig. 7.14 (CCIR, 1984). Splitting the gain between the preamplifier at 6 GHz and the second amplifier at 4 GHz prevents oscillation which might occur if all the gain were to be provided at the same frequency.

The wideband receiver utilizes only solid-state active devices. In some designs, tunnel-diode amplifiers have been used for the preamplifier at 6 GHz in 6/4-GHz transponders and for the parametric amplifiers at 14 GHz in 14/12-GHz transponders. With advances in field-effect transistor (FET) technology, FET amplifiers which offer equal or better performance are now available for both bands. Diode mixer stages are used. The amplifier following the mixer may utilize bipolar junction transistors (BJTs) at 4 GHz and FETs at 12 GHz, or FETs may in fact be used in both bands.

7.7.2 The input demultiplexer

The input demultiplexer separates the broadband input, covering the frequency range 3.7 to 4.2 GHz, into the transponder frequency channels. Referring to Fig. 7.13, for example, the separate channels labeled 1 through 12 are shown in more detail in Fig. 7.15. The channels are usually arranged in even-numbered and odd-numbered groups. This provides greater frequency separation between adjacent channels in a group, which reduces adjacent channel interference. The output from the receiver is fed to a power splitter, which in turn feeds the two separate chains of circulators. The full broadband signal is transmitted along each chain, and the channelizing is achieved by means of channel filters connected to each circulator, as shown in Fig. 7.15. The channel numbers correspond to those shown in Fig. 7.13. Each filter has a bandwidth of 36 MHz and is tuned to the appropriate center frequency, as shown in Fig. 7.13. Although there are considerable losses in the demultiplexer, these are easily made up in the overall gain for the transponder channels.

7.7.3 The power amplifier

A separate power amplifier provides the output power for each transponder channel. As shown in Fig. 7.16, each power amplifier is preceded by an input attenuator. This is necessary to permit the input drive to each power amplifier to be adjusted to the desired level. The attenuator has a fixed section and a variable section. The fixed attenuation is needed to balance out variations in the input attenuation so that each transponder channel has the same nominal attenuation, the necessary adjustments

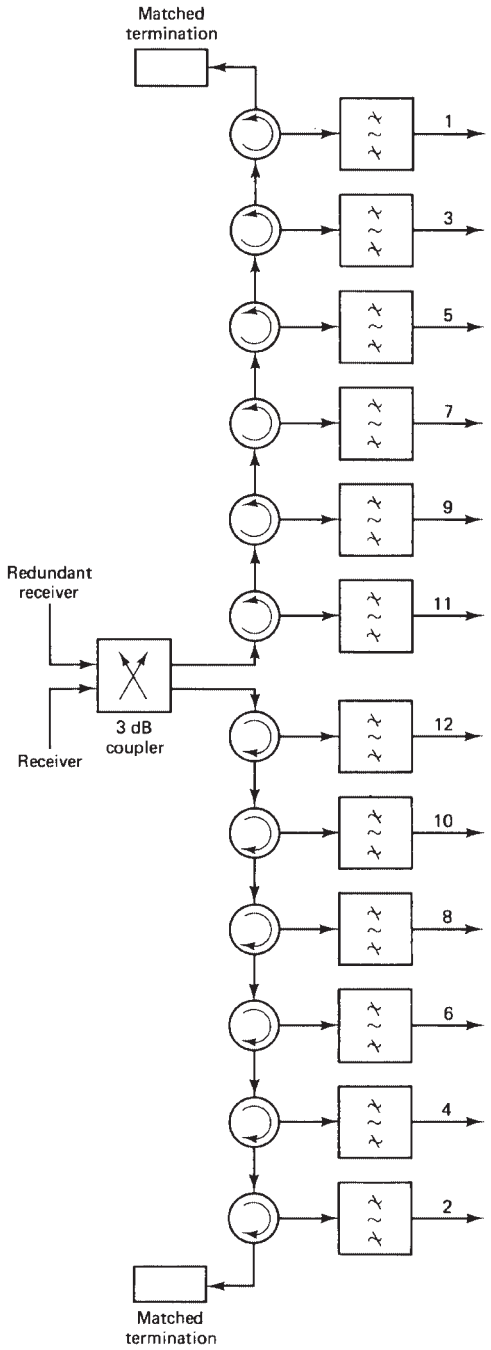

Figure 7.15 Input demultiplexer. (*Courtesy of CCIR, CCIR Fixed Satellite Services Handbook, final draft 1984.*)

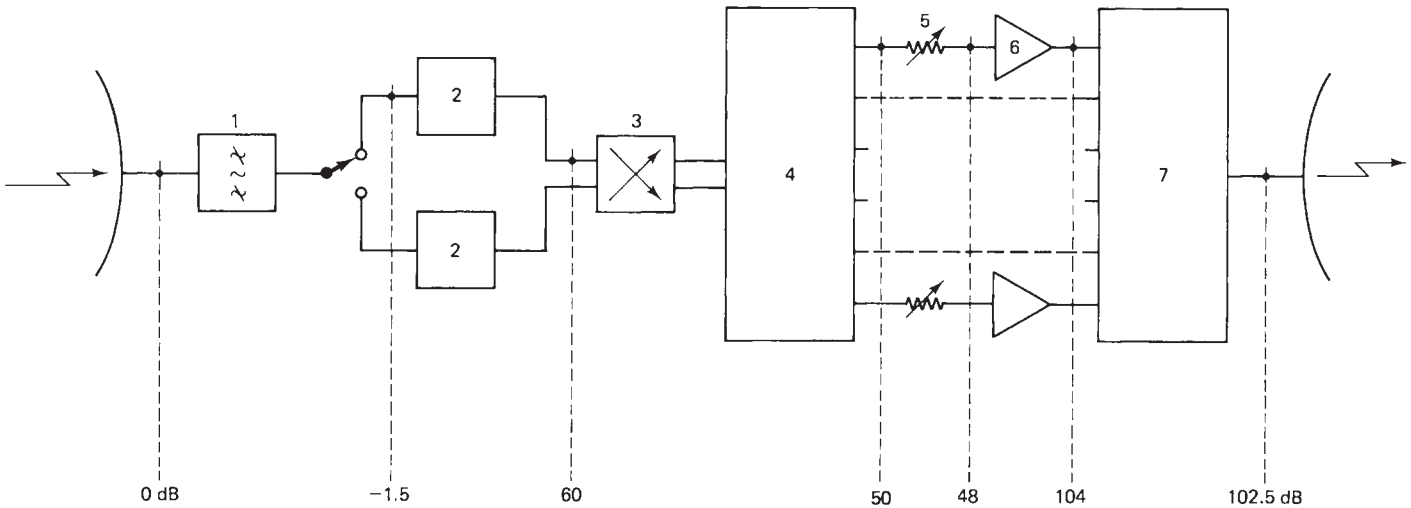

0 dB reference level
1 input filter
2 wideband receiver
3 3 dB coupler
4 demultiplexer
5 attenuator (lower position)
6 amplifier
7 multiplexer

Figure 7.16 Typical diagram of the relative levels in a transponder. (*Courtesy of CCIR, CCIR Fixed Satellite Services Handbook, final draft 1984.*)

being made during assembly. The variable attenuation is needed to set the level as required for different types of service (an example being the requirement for input power backoff discussed below). Because this variable attenuator adjustment is an operational requirement, it must be under the control of the ground TT&C station.

Traveling-wave tube amplifiers (TWTAs) are widely used in transponders to provide the final output power required to the transmit antenna. Figure 7.17 shows the schematic of a traveling wave tube (TWT) and its power supplies. In the TWT, an electron-beam gun assembly consisting of a heater, a cathode, and focusing electrodes is used to form an electron beam. A magnetic field is required to confine the beam to travel along the inside of a wire helix. For high-power tubes such as might be used in ground stations, the magnetic field can be provided by means of a solenoid and dc power supply. The comparatively large size and high power consumption of solenoids make them unsuitable for use aboard satellites, and lower-power TWTs are used which employ permanent-magnet focusing.

The rf signal to be amplified is coupled into the helix at the end nearest the cathode and sets up a traveling wave along the helix. The electric field of the wave will have a component along the axis of the helix. In some regions, this field will decelerate the electrons in the beam, and in others it will accelerate them so that electron bunching occurs along the beam. The average beam velocity, which is determined by the dc potential on the tube collector, is kept slightly greater than the phase velocity of the wave along the helix. Under these conditions, an energy transfer takes place, kinetic energy in the beam being converted to potential energy in the wave. The wave actually will travel around the helical path at close to the speed of light, but it is the axial component of wave velocity which interacts with the electron beam. This component is less than the velocity of light approximately in the ratio of helix pitch to circumference. Because of this effective reduction in phase velocity, the helix is referred to as a *slow-wave structure.*

The advantage of the TWT over other types of tube amplifiers is that it can provide amplification over a very wide bandwidth. Input levels to the TWT must be carefully controlled, however, to minimize the effects of certain forms of distortion. The worst of these results from the nonlinear transfer characteristic of the TWT, illustrated in Fig. 7.18. At low input powers, the output-input power relationship is linear; that is, a given decibel change in input power will produce the same decibel change in output power. At higher power inputs, the output power saturates, the point of maximum power output being known as the *saturation point.* The saturation point is a very convenient reference point, and input and output quantities are usually referred to

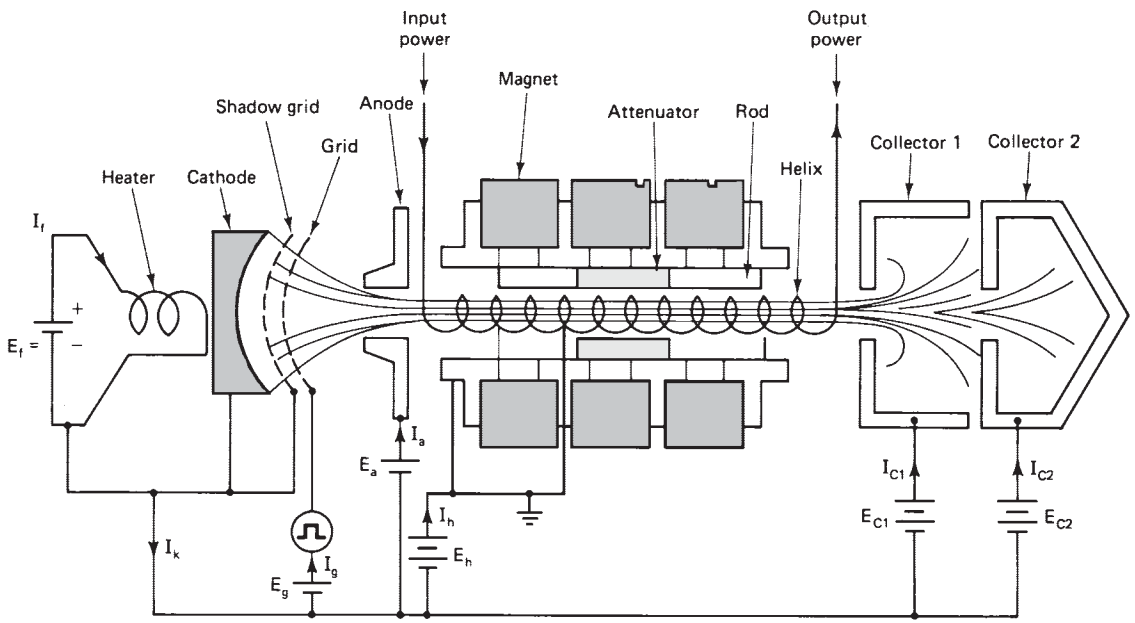

Figure 7.17 Schematic of a TWT and power supplies. (*From Hughes TWT and TWTA Handbook; courtesy of Hughes Aircraft Company, Electron Dynamics Division, Torrance, CA.*)

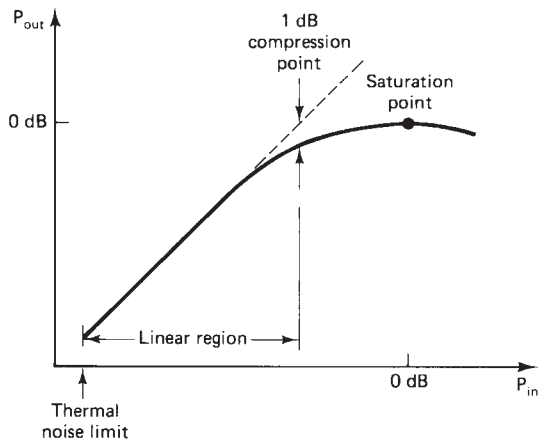

Figure 7.18 Power transfer characteristics of a TWT. The saturation point is used as 0-dB reference for both input and output.

it. The linear region of the TWT is defined as the region bound by the thermal noise limit at the low end and by what is termed the *1-dB compression point* at the upper end. This is the point where the actual transfer curve drops 1 dB below the extrapolated straight line, as shown in Fig. 7.18. The selection of the operating point on the transfer characteristic will be considered in more detail shortly, but first the phase characteristics will be described.

The absolute time delay between input and output signals at a fixed input level is generally not significant. However, at higher input levels, where more of the beam energy is converted to output power, the average beam velocity is reduced, and therefore, the delay time is increased. Since phase delay is directly proportional to time delay, this results in a phase shift which varies with input level. Denoting the phase shift at saturation by θ_S and in general by θ, the phase difference relative to saturation is $\theta - \theta_S$. This is plotted in Fig. 7.19 as a function of input power. Thus, if the input signal power level changes, phase modulation will result, this being termed *AM/PM conversion.* The slope of the phase shift characteristic gives the phase modulation coefficient, in degrees per decibel. The curve of the slope as a function of input power is also sketched in Fig. 7.19.

Frequency modulation (FM) is usually employed in analog satellite communications circuits. However, unwanted amplitude modulation (AM) can occur from the filtering which takes place prior to the TWT input. The AM process converts the unwanted amplitude modulation to phase modulation (PM), which appears as noise on the FM carrier. Where only a single carrier is present, it may be passed through a

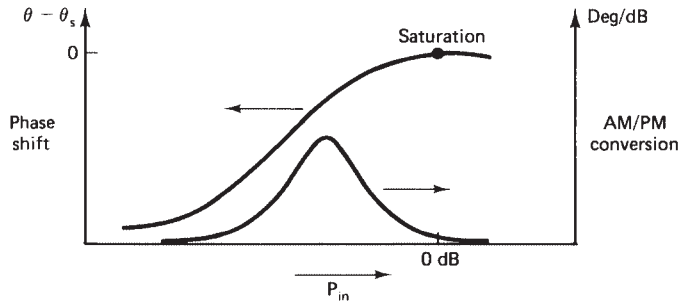

Figure 7.19 Phase characteristics for a TWT. θ is the input-to-output phase shift, and θ_S is the value at saturation. The AM/PM curve is derived from the slope of the phase shift curve.

hard limiter before being amplified in the TWT. The hard limiter is a circuit which clips the carrier amplitude close to the zero baseline to remove any amplitude modulation. The frequency modulation is preserved in the zero crossover points and is not affected by the limiting.

A TWT also may be called on to amplify two or more carriers simultaneously, this being referred to as *multicarrier operation.* The AM/PM conversion is then a complicated function of carrier amplitudes, but in addition, the nonlinear transfer characteristic introduces a more serious form of distortion known as *intermodulation distortion.* The nonlinear transfer characteristic may be expressed as a Taylor series expansion which relates input and output voltages:

$$e_o = ae_i + be_i^2 + ce_i^3 + \cdots \tag{7.1}$$

Here, *a, b, c,* etc. are coefficients which depend on the transfer characteristic, e_o is the output voltage, and e_i is the input voltage, which consists of the sum of the individual carriers. The *third-order term* is ce_i^3. This and higher-order odd-power terms give rise to intermodulation products, but usually only the third-order contribution is significant. Suppose multiple carriers are present, separated from one another by Δf, as shown in Fig. 7.20. Considering specifically the carriers at frequencies f_1 and f_2, these will give rise to frequencies $2f_2 - f_1$ and $2f_1 - f_2$ as a result of the third-order term. (This is demonstrated in App. E.)

Because $f_2 - f_1 = \Delta f$, these two intermodulation products can be written as $f_2 + \Delta f$ and $f_1 - \Delta f$, respectively. Thus the intermodulation products fall on the neighboring carrier frequencies as shown in Fig. 7.20. Similar intermodulation products will arise from other carrier pairs, and when the carriers are modulated the intermodulation distortion appears as noise across the transponder frequency band. This intermodulation noise is considered further in Sec. 12.10.

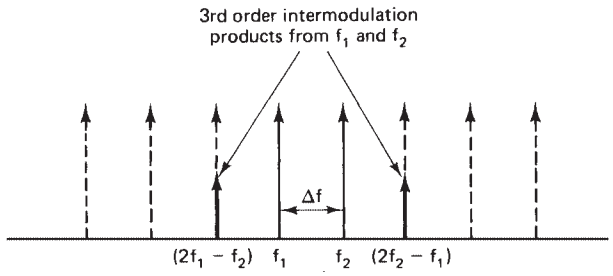

Figure 7.20 Third-order intermodulation products.

In order to reduce the intermodulation distortion, the operating point of the TWT must be shifted closer to the linear portion of the curve, the reduction in input power being referred to as *input backoff*. When multiple carriers are present, the power output around saturation, for any one carrier, is less than that achieved with single-carrier operation. This is illustrated by the transfer curves of Fig. 7.21. The input backoff is the difference in decibels between the carrier input at the operating point and the saturation input which would be required for single-carrier operation. The output backoff is the corresponding drop in output power. Backoff values are always stated in decibels relative to the saturation point. As a rule of thumb, output backoff is about 5 dB less than input backoff. The need to incorporate backoff significantly reduces the channel capacity of a satellite link because of the reduced carrier-to-noise ratio received at the ground station. Allowance for backoff in the link budget calculations is dealt with in Secs. 12.7.2 and 12.8.1.

7.8 The Antenna Subsystem

The antennas carried aboard a satellite provide the dual functions of receiving the uplink and transmitting the downlink signals. They range from dipole-type antennas where omnidirectional characteristics are required to the highly directional antennas required for telecommunications purposes and TV relay and broadcast. Parts of the antenna structures for the HS 376 and HS 601 satellites can be seen in Figs. 7.1, 7.2, and 7.7.

Directional beams are usually produced by means of reflector-type antennas, the paraboloidal reflector being the most common. As shown in Chap. 6, the gain of the paraboloidal reflector, relative to an isotropic radiator, is given by Eq. (6.32)

$$G = \eta_I \left(\frac{\pi D}{\lambda} \right)^2$$

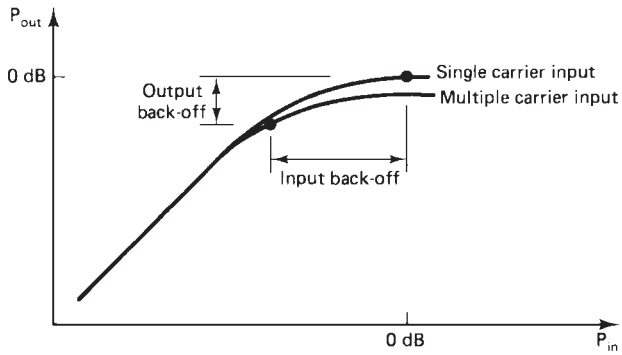

Figure 7.21 Transfer curve for a single carrier and for one carrier of a multiple-carrier input. Backoff for multiple-carrier operation is relative to saturation for single-carrier input.

where λ is the wavelength of the signal, D is the reflector diameter, and η_I is the aperture efficiency. A typical value for η_I is 0.55. The −3-dB beamwidth is given approximately by Eq. (6.33) as

$$\theta_{3\,dB} \cong 70\ \frac{\lambda}{D}\ \textit{degrees}$$

The ratio D/λ is seen to be the key factor in these equations, the gain being directly proportional to $(D/\lambda)^2$ and the beamwidth inversely proportional to D/λ. Hence the gain can be increased and the beamwidth made narrower by increasing the reflector size or decreasing the wavelength. The largest reflectors are those for the 6/4-GHz band. Comparable performance can be obtained with considerably smaller reflectors in the 14/12-GHz band.

Figure 7.22 shows the antenna subsystem of the INTELSAT VI satellite (Johnston and Thompson, 1982). This provides a good illustration of the level of complexity which has been reached in large communications satellites. The largest reflectors are for the 6/4-GHz hemisphere and zone coverages, as illustrated in Fig. 7.23. These are fed from horn arrays, and various groups of horns can be excited to produce the beam shape required. As can be seen, separate arrays are used for transmit and receive. Each array has 146 dual-polarization horns. In the 14/11-GHz band, circular reflectors are used to provide spot beams, one for east and one for west, also shown in Fig. 7.23. These beams are fully steerable. Each spot is fed by a single horn which is used for both transmit and receive.

Wide beams for global coverage are produced by simple horn antennas at 6/4 GHz. These horns beam the signal directly to the earth without the use of reflectors. Also as shown in Fig. 7.22, a simple biconical dipole antenna is used for the tracking and control signals.

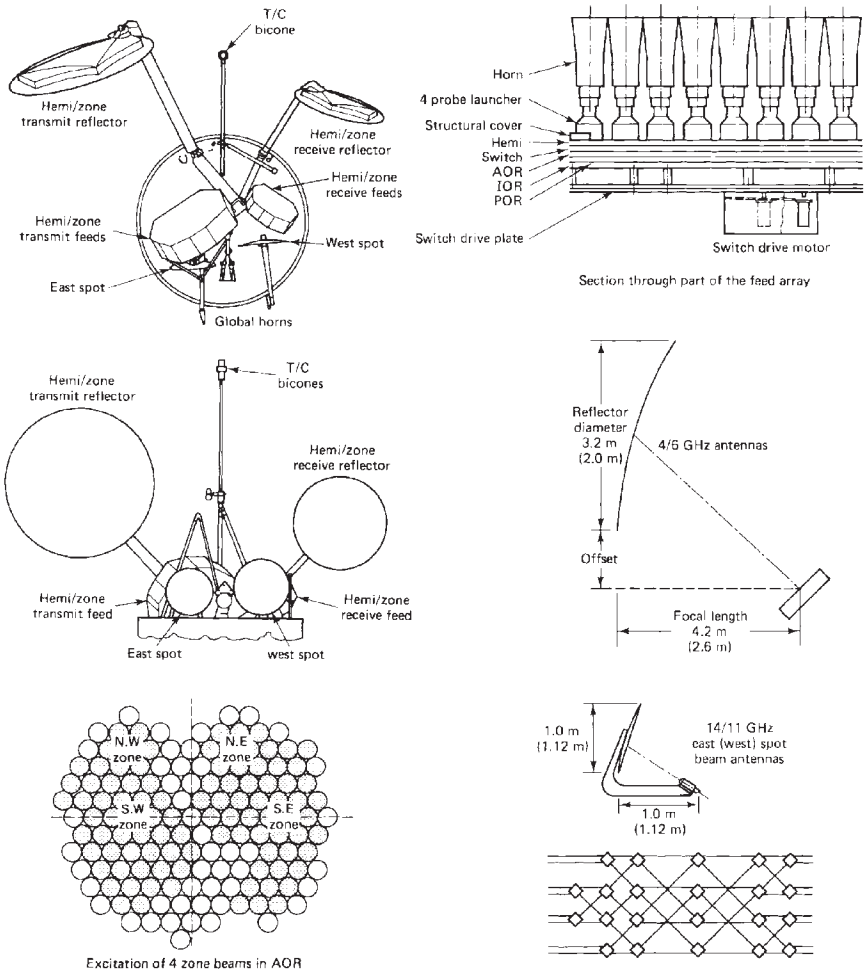

Figure 7.22 The antenna subsystem for the INTELSAT VI satellite. (*From Johnston and Thompson, 1982, with permission.*)

The complete antenna platform and the communications payload are despun as described in Sec. 7.3 to keep the antennas pointing to their correct locations on earth.

The same feed horn may be used to transmit and receive carriers with the same polarization. The transmit and receive signals are separated in a device known as a *diplexer,* and the separation is further aided by means of frequency filtering. Polarization discrimination also may be used to separate the transmit and receive signals using the same feed horn. For example, the horn may be used to transmit horizontally polarized waves in the downlink frequency band, while simultaneously receiving vertically

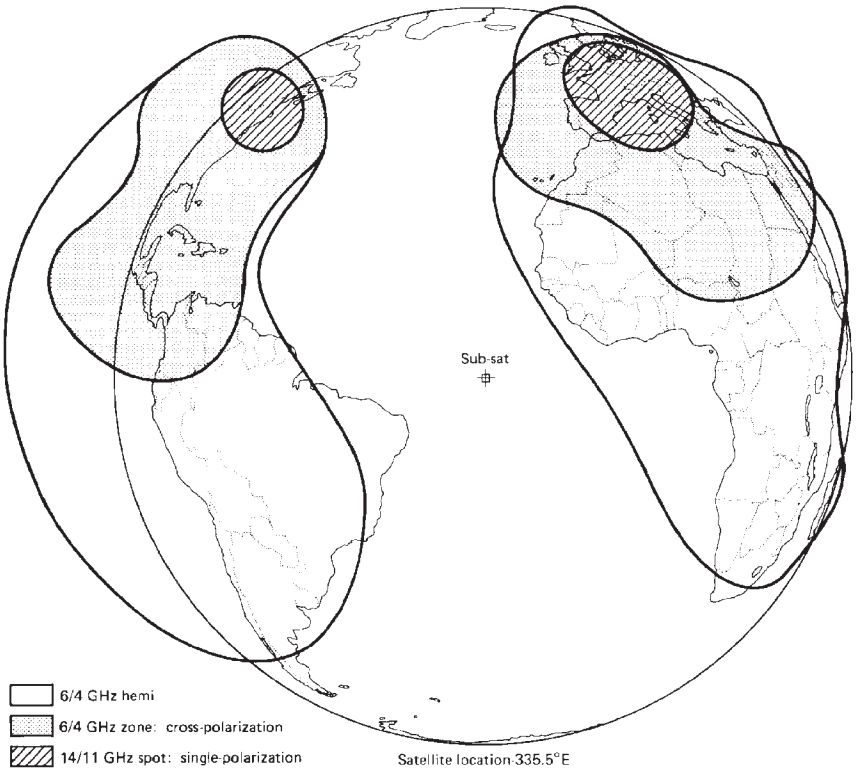

Figure 7.23 INTELSAT V Atlantic satellite transmit capabilities. (*Note:* The 14/11-GHz spot beams are steerable and may be moved to meet traffic requirements as they develop.) (*From Intelsat Document BG-28-72E M/6/77, with permission.*)

polarized waves in the uplink frequency band. The polarization separation takes place in a device known as an *orthocoupler,* or orthogonal mode transducer (OMT). Separate horns also may be used for the transmit and receive functions, with both horns using the same reflector.

7.9 Morelos

Figure 7.24 shows the communications subsystem of the Mexican satellite Morelos. Two such satellites were launched, Morelos A in June and Morelos B in November 1985. The satellites are from the Hughes 376 spacecraft series. Although these satellites had a predicted mission life of 9 years, the second Morelos was scheduled to remain in operation until 1998. The payload carried on Morelos is referred to as a *hybrid,* or *dual-band, payload* because it carries C-band and K-band transponders. In the C band it provides 12 narrowband channels,

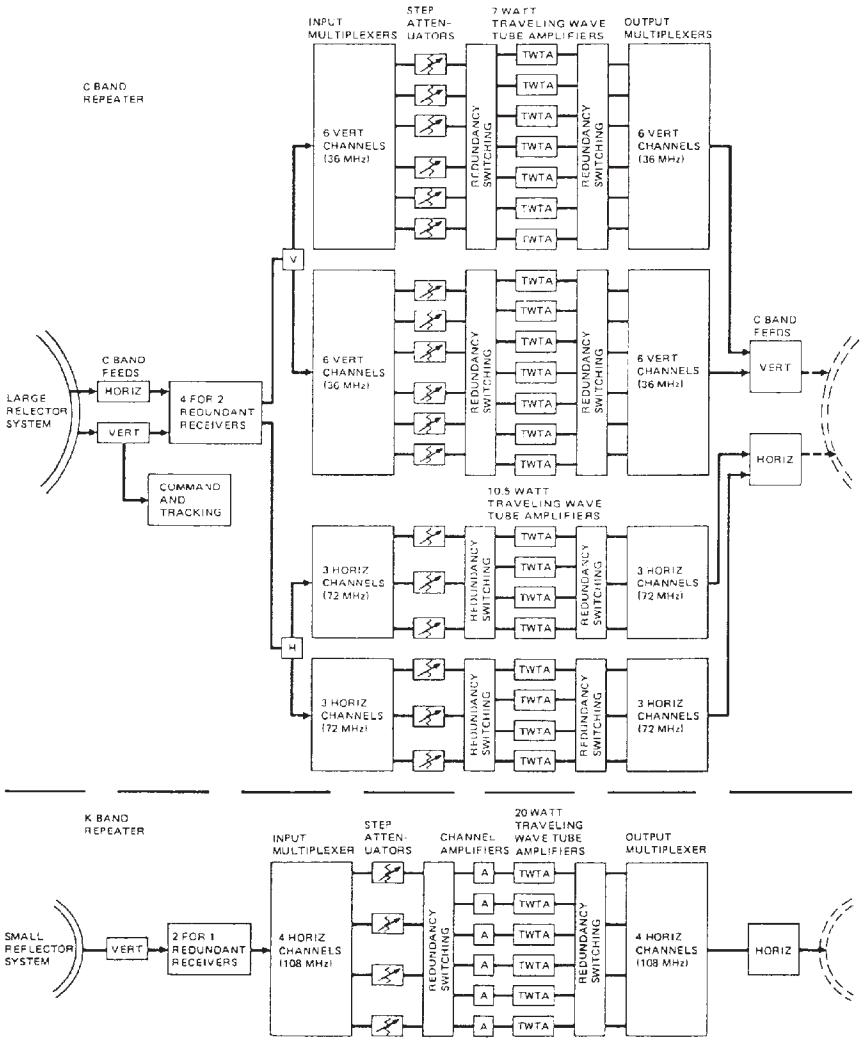

Figure 7.24 Communications subsystem functional diagram for Morelos. (*Courtesy of Hughes Aircraft Company Space and Communications Group.*)

each 36-MHz wide, and 6 wideband channels, each 72-MHz wide. In the K band it provides four channels, each 108 MHz wide. The 36-MHz channels use 7-W TWTAs with 14-for-12 redundancy. This method of stating redundancy simply means that 12 redundant units are available for 14 in-service units. The 72-MHz channels use 10.5-W TWTAs with 8-for-6 redundancy.

The four K-band repeaters use six 20-W TWTAs with 6-for-4 redundancy. The receivers are solid-state designs, and there is a 4-for-2

redundancy for the C-band receivers and 2-for-1 redundancy for the K-band receivers.

As mentioned, the satellites are part of the Hughes 376 series, illustrated in Figs. 7.1 and 7.6. A 180-cm-diameter circular reflector is used

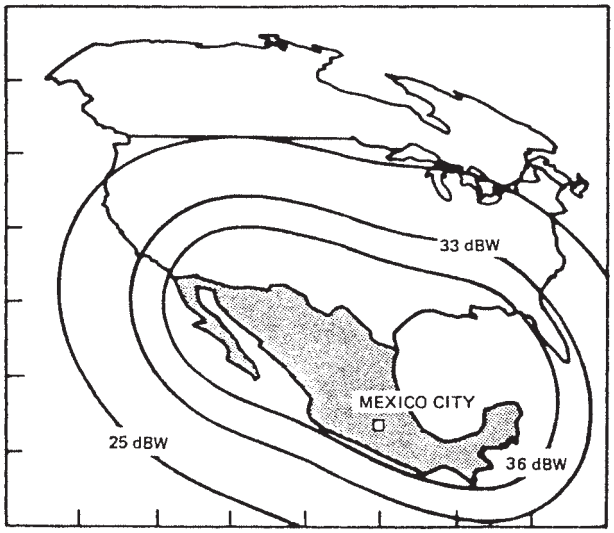

(*a*)

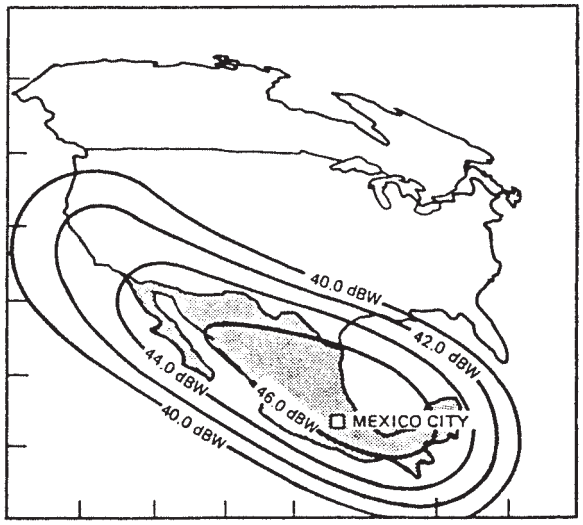

(*b*)

Figure 7.25 (*a*) C-band and (*b*) K-band transmit coverage for Morelos. (*Courtesy of Hughes Aircraft Company Space and Communications Group.*)

for the C band. This forms part of a dual-polarization antenna, with separate C-band feeds for horizontal and vertical polarizations. The C-band footprints are shown in Fig. 7.25*a*.

The K-band reflector is elliptical in shape, with axes measuring 150 by 91 cm. It has its own feed array, producing a footprint which closely matches the contours of the Mexican land mass, as shown in Fig. 7.25*b*. The K-band reflector is tied to the C-band reflector, and onboard tracking of a C-band beacon transmitted from the Tulancingo TT&C station ensures precise pointing of the antennas.

7.10 Anik-E

The Anik-E satellites are part of the Canadian Anik series of satellites designed to provide communications services in Canada as well as cross-border services with the United States. The Anik-E is also a dual-band satellite which has an equivalent capacity of 56 television channels, or more than 50,000 telephone circuits. Attitude control is of the momentum-bias, three-axes-stabilized type, and solar sails are used to provide power, the capacity being 3450 W at summer solstice and 3700 W at vernal equinox. Four NiH_2 batteries are provided for operation during eclipse. An exploded view of the Anik-E spacecraft configuration is shown in Fig. 7.26.

The C-band transponder functional block diagram is shown in Fig. 7.27. This is seen to use solid-state power amplifiers (SSPAs) which offer significant improvement in reliability and weight saving over traveling-wave tube amplifiers. The antennas are fed through a broadband feeder network (BFN) to illuminate the large reflectors shown in Fig. 7.26. National, as distinct from regional, coverage is provided at C band, and some typical predicted satellite transmit footprints are shown in Fig. 7.28. The frequency and polarization plan for the Anik-E is similar to that for the Anik-D, which is shown in Fig. 7.29.

The Ku-band transponder functional block diagram is shown in Fig. 7.30. It will be noted that at these higher frequencies, traveling-wave tube amplifiers are used. The Anik-E1 frequency and polarization plan is shown in Fig. 7.31. National and regional beams are provided for operation within Canada, as well as what is termed *enhanced cross-border capability* (ECBC), which provides services to customers with sites in the United States as well as Canada. The satellite transmit footprint for the ECBC is shown in Fig. 7.32, and the receive saturation flux density (SFD) contours are shown in Fig. 7.33. The meaning and significance of the equivalent isotropic radiated power (EIRP) contours and the SFD contours will be explained in Chap. 12. The Anik-E system characteristics are summarized in Table 7.1.

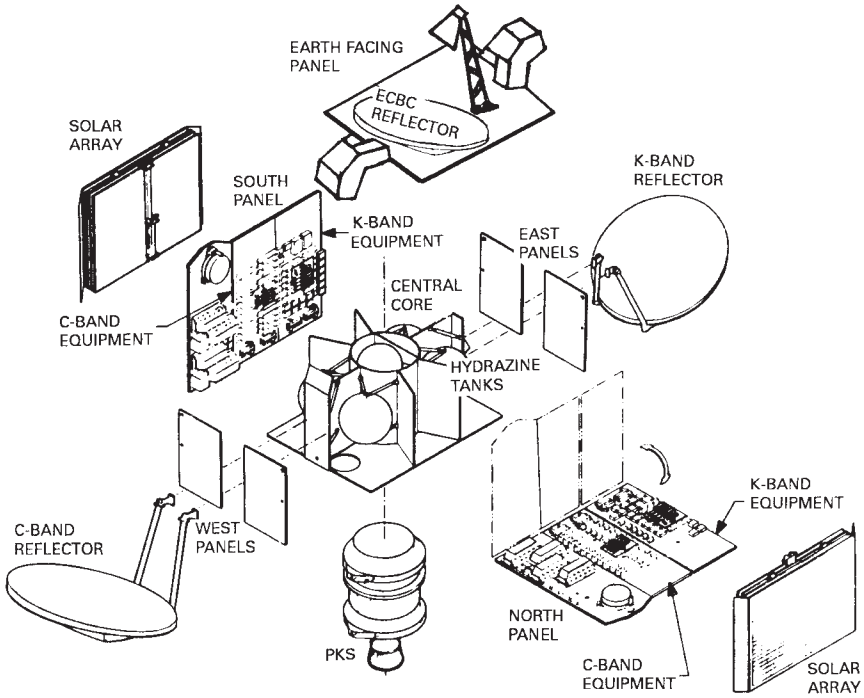

Figure 7.26 Anik-E spacecraft configuration. (*Courtesy of Telesat Canada.*)

The TWTAs aboard a satellite also may be switched to provide redundancy, as illustrated in Fig. 7.34. The scheme shown is termed a *4-for-2 redundancy,* meaning that four channels are provided with two redundant amplifiers. For example, examination of the table in Fig. 7.34 shows that channel 1A has amplifier 2 as its primary amplifier, and amplifiers 1 and 3 can be switched in as backup amplifiers by ground command. In this system, 12 channels are designated as primary, and the remainder are either used with preemptible traffic or kept in reserve as backups.

7.11 Advanced Tiros-N Spacecraft

Tiros is an acronym for Television and Infra-Red Observational Satellite. As described in Chap. 1, Tiros is a polar-orbiting satellite whose primary mission is to gather and transmit earth environmental data down to its earth stations. Although its payload differs fundamentally from the

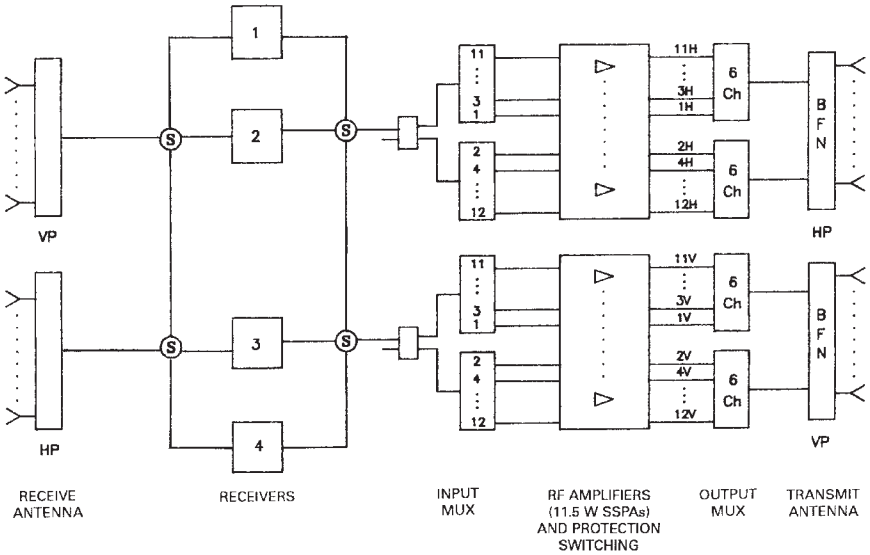

Figure 7.27 Anik-E C-band transponder functional block diagram. (*Courtesy of Telesat Canada.*)

communications-relay-type payload, much of the bus equipment is similar. Table 1.7 lists the NOAA spacecraft used in the Advanced TIROS-N (ATN) program. The general features of these spacecraft are described in Schwalb (1982*a,* 1982*b*), and current information can be obtained at the NOAA Web site *http://www.noaa.gov/*. The main features of the NOAA-KLM spacecraft are shown in Fig. 7.35, and the physical and orbital characteristics are given in Table 7.2.

Three nickel-cadmium (Ni-Cd) batteries supply power while the spacecraft is in darkness. The relatively short lifetime of these spacecraft results largely from the effects of atmospheric drag present at the low orbital altitudes. Attitude control of the NOAA spacecraft is achieved through the use of three reaction wheels similar to the arrangement shown in Fig. 7.8. A fourth, spare, wheel is carried, angled at 54.7° to each of the three orthogonal axes. The spare reaction wheel is normally idle but is activated in the event of failure of any of the other wheels. The 54.7° angle permits its torque to be resolved into components along each of the three main axes. As can be seen from Fig. 7.35, the antennas are omnidirectional, but attitude control is needed to maintain directivity for the earth sensors. These must be maintained within ±0.2° of the local geographic reference (Schwalb, 1982*a*).

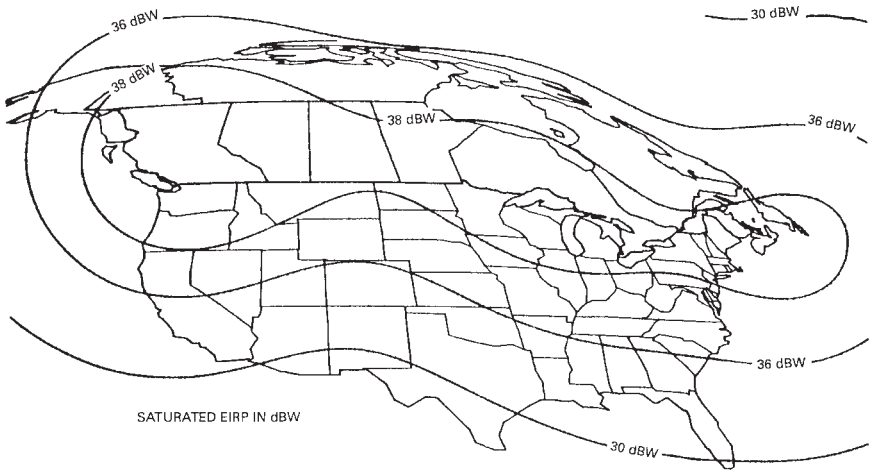

Figure 7.28 Anik-E typical C-band coverage, saturated EIRP in dBW (prelaunch EIRP predicts-preliminary). (*Courtesy of Telesat Canada.*)

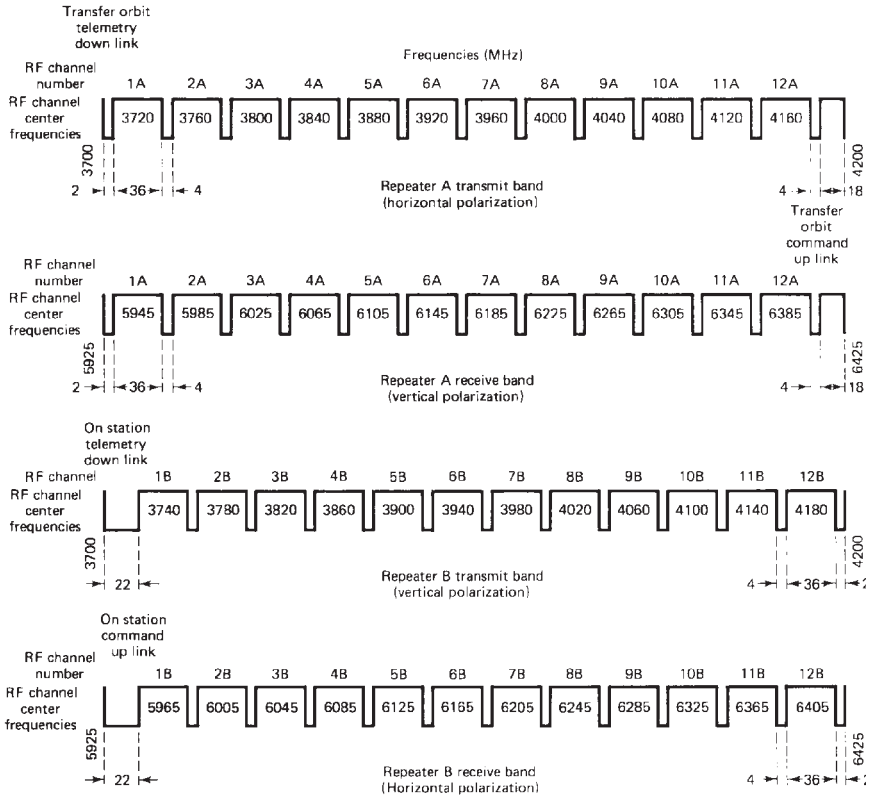

Figure 7.29 Anik-D 6/4-GHz frequency and polarization plan. (*From Telesat Canada, 1985; courtesy of Telesat Canada.*)

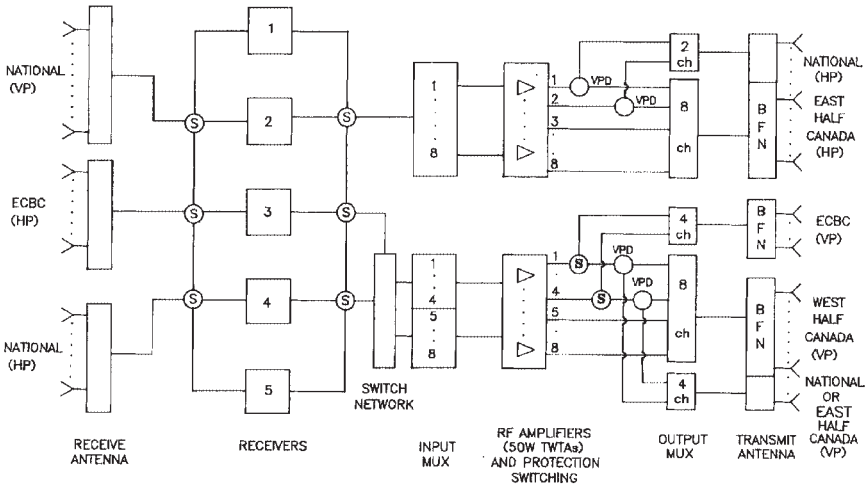

Figure 7.30 Ku-band transponder functional diagram for Anik-E. (*Courtesy of Telesat Canada.*)

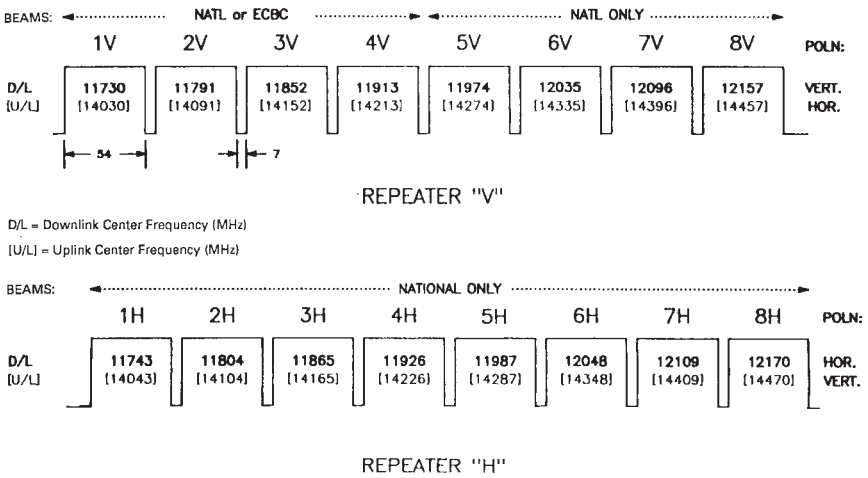

Figure 7.31 Anik-E1 frequency and polarization plan, Ku-band. (*Courtesy of Telesat Canada.*)

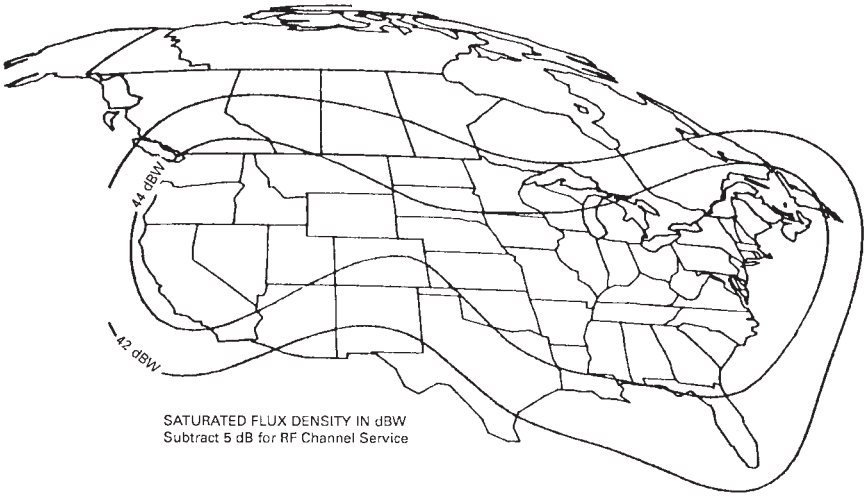

Figure 7.32 Anik-E enhanced cross-border capability (ECBC), Ku-band coverage, vertical polarization (VP). Saturated EIRP in dBW (prelaunch EIRP predicts, preliminary). (*Courtesy of Telesat Canada.*)

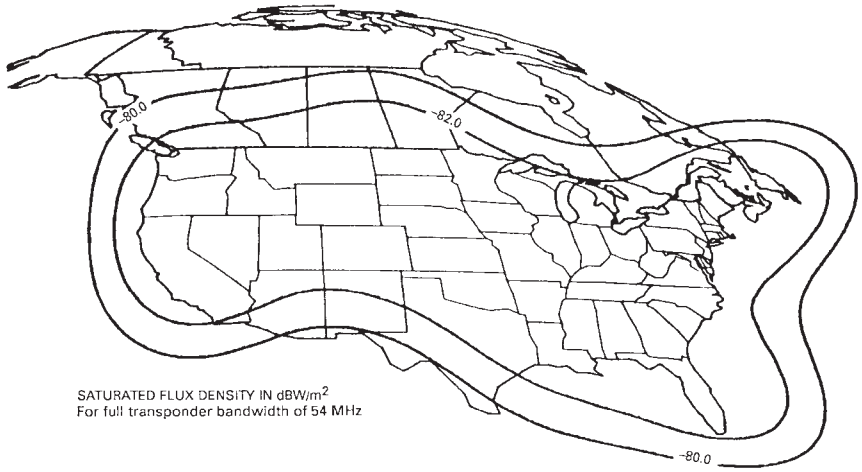

Figure 7.33 Anik-E ECBC saturated flux density (SFD) contours, Ku-band horizontal polarization (HP) (prelaunch predicts, preliminary). (*Courtesy of Telesat Canada.*)

TABLE 7.1 Anik-E System Characteristics

Prime contractor	Spar Aerospace	
Type of satellite bus	GE Astro Series 5000	
Number of satellites	2	
Launch dates	E1: March 1990; E2: October 1990	
Orbital range, °W	104.5 to 117.5	
Orbital position, °W	E1: 107.5; E2: 110.5	
Design life, years	12	
Fuel life, years	13.5	
Dry weight, kg	1280	
Transfer orbit mass, kg	2900	
Length, m	21.5	
Array power, kW	3.5 (end of life)	
Eclipse capability	100%	
Frequency bands, GHz	6/4	14/12
Number of channels	24	16
Transponder bandwidth, MHz	36	54
HPA* (W)	11.5 (SSPA)	50 (TWTA)

*High-power amplifier.

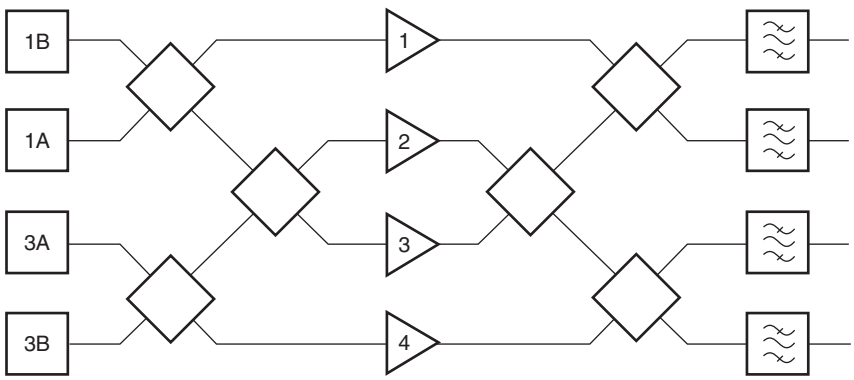

CHANNEL	1A	3A	1B	3B
TWTA				
PRIMARY	2	3	1	4
BACKUP	1 or 3	2 or 4	2 or 3	2 or 3

Figure 7.34 Anik-D TWTA 4-for-2 redundancy switching arrangement. (*From Telesat Canada, 1983; courtesy of Telesat Canada.*)

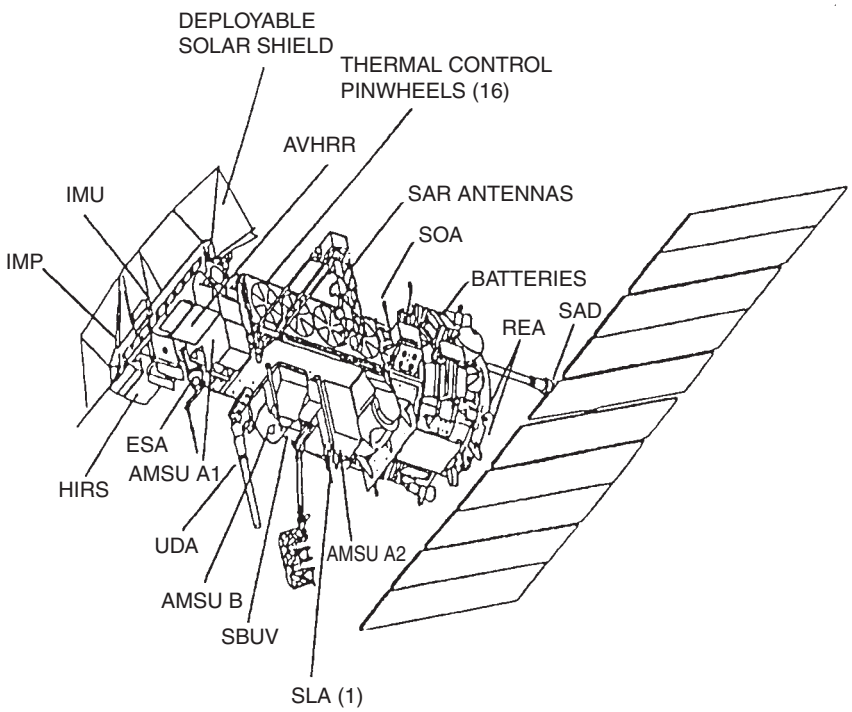

LEGEND	
AMSU	ADVANCED MICROWAVE SOUNDING UNIT
AVHRR	ADVANCED VERY HIGH RESOLUTION RADIOMETER
ESA	EARTH SENSOR ASSEMBLY
HIRS	HIGH RESOLUTION INFRARED SOUNDER
IMP	INSTRUMENT MOUNTING PLATFORM
IMU	INERTIAL MEASUREMENT UNIT
MHS	MICROWAVE HUMIDITY SOUNDER
REA	REACTION ENGINE ASSEMBLY
SAD	SOLAR ARRAY DRIVE
SAR	SEARCH AND RESCUE
SBUV	SOLAR BACKSCATTER ULTRAVIOLET SOUNDING SPECTRAL RADIOMETER
SOA	S-BAND OMNI ANTENNA
SLA	SEARCH AND RESCUE TRANSMITTING ANTENNA (L BAND)
UDA	ULTRA HIGH FREQUENCY DATA COLLECTION SYSTEM ANTENNA
VRA	VERY HIGH FREQUENCY REALTIME ANTENNA

Figure 7.35 NOAA-KLM spacecraft configuration. (*Courtesy of NOAA National Environmental Satellite, Data, and Information Service.*)

TABLE 7.2 NOAA-15 Characteristics

Main body	4.2 m (13.75 ft) long, 1.88 m (6.2 ft) diameter
Solar array	2.73 m (8.96 ft) by 6.14 m (20.16 ft)
Weight at liftoff	2231.7 kg (4920 lb) including 756.7 kg of expendable fuel
Launch vehicle	Lockheed Martin Titan II
Orbital information	Type: Sun-synchronous
	Altitude: 833 km
	Period: 101.2 minutes
	Inclination: 98.70°

SOURCE: Data obtained from *http://140.90.207.25:8080/EBB/ml/genlsatl.html.*

7.12 Problems

7.1. Describe the *tracking, telemetry,* and *command* facilities of a satellite communications system. Are these facilities part of the space segment or part of the ground segment of the system?

7.2. Explain why some satellites employ cylindrical solar arrays, whereas others employ solar-sail arrays for the production of primary power. State the typical power output to be expected from each type. Why is it necessary for satellites to carry batteries in addition to solar-cell arrays?

7.3. Explain what is meant by satellite *attitude,* and briefly describe two forms of attitude control.

7.4. Define and explain the terms *roll, pitch,* and *yaw.*

7.5. Explain what is meant by the term *despun antenna,* and briefly describe one way in which the despinning is achieved.

7.6. Briefly describe the three-axis method of satellite stabilization.

7.7. Describe the east-west and north-south station-keeping maneuvers required in satellite station keeping. What are the angular tolerances in station keeping that must be achieved?

7.8. Referring to Fig. 7.10 and the accompanying text in Sec. 7.4, determine the minimum −3-dB beamwidth that will accommodate the tolerances in satellite position without the need for tracking.

7.9. Explain what is meant by *thermal control* and why this is necessary in a satellite.

7.10. Explain why an omnidirectional antenna must be used aboard a satellite for telemetry and command during the launch phase. How is the satellite powered during this phase?

7.11. Briefly describe the equipment sections making up a transponder channel.

7.12. Draw to scale the uplink and downlink channeling schemes for a 500-Mhz-bandwidth C-band satellite, accommodating the full complement of 36-Mhz-bandwidth transponders. Assume the use of 4-Mhz guardbands.

7.13. Explain what is meant by *frequency reuse*, and describe briefly two methods by which this can be achieved.

7.14. Explain what is meant by *redundant receiver* in connection with communication satellites.

7.15. Descibe the function of the input demultiplexer used aboard a communications satellite.

7.16. Describe briefly the most common type of high-power amplifying device used aboard a communications satellite.

7.17. What is the chief advantage of the traveling wave tube amplifier used aboard satellites compared to other types of high-power amplifying devices? What are the main disadvantages of the TWTA?

7.18. Define and explain the term 1-dB *compression point*. What is the significance of this point in relation to the operating point of a TWT?

7.19. Explain why operation near the saturation point of a TWTA is to be avoided when multiple carriers are being amplified simultaneously.

7.20. State the type of satellite antenna normally used to produce a wide-beam radiation pattern, providing global coverage. How are spot beams produced?

7.21. Describe briefly how beam shaping of a satellite antenna radiation pattern may be achieved.

7.22. With reference to Figure 7.34, explain what is meant by a *four-for-two redundancy switching arrangement*.